For the competent person

Installation and maintenance instructions

ecoTEC

VU 466/4

GB

Vaillant

Contents

1 Notes on the documentation ... 3
1.1 Storage of documents ... 3
1.2 Safety instructions and symbols ... 3
1.3 Validity of the instruction manual ... 3

2 Description of the boiler ... 4
2.1 Design ... 4
2.2 Type summary ... 5
2.3 CE label ... 5
2.4 Benchmark ... 5
2.5 Intended use ... 5
2.6 Identification plate ... 5

3 Safety instructions and regulations ... 5
3.1 Safety instructions ... 5
3.1.1 Installation and setting ... 5
3.1.2 Gas odour ... 5
3.1.3 Changes to the surroundings of the boiler ... 6
3.1.4 Important information regarding propane-fired appliances ... 6
3.2 General requirements ... 6
3.2.1 Related documents ... 6
3.2.2 Installation site ... 6
3.2.3 Gas supply ... 7
3.3 Air/flue gas duct ... 7
3.3.1 Standard 125 mm air/flue gas duct ... 7
3.3.2 Flue termination ... 7
3.4 Air supply ... 9
3.5 Compartment ventilation ... 9
3.6 Electrical supply ... 9

4 Assembly ... 10
4.1 Scope of delivery ... 10
4.2 Accessories ... 10
4.3 Installation site ... 10
4.4 Dimension drawing and connection dimensions ... 11
4.5 Required minimum gaps/ installation clearances ... 12
4.6 Using the installation template ... 12
4.7 Mounting the boiler ... 12
4.8 Removing/attaching the front casing ... 13

5 Installation ... 13
5.1 Heating mode ... 14
5.2 Cylinder charging mode ... 15
5.3 Heating mode and cylinder charging mode ... 16
5.4 Gas connection ... 17
5.5 Heating connection ... 17
5.6 Expansion relief valve (safety group), heating installation ... 18
5.7 Condensate drainage pipework ... 18
5.8 Electrical connection ... 19
5.8.1 Mains connection ... 19
5.8.2 Connecting controllers ... 20
5.8.3 Connecting a low loss header sensor ... 21
5.8.4 Additional relay (grey plug on the PCB) and VR40 - "2 in 7" multifunctional module ... 21
5.8.5 Wiring diagrams ... 22

6 Start-up ... 24
6.1 Water circulation system ... 24
6.2 Filling the system ... 24
6.2.1 Preparation of heating water ... 24
6.2.2 Filling and bleeding from the heating side ... 25
6.2.3 Filling the condensate siphon ... 26
6.3 Checking the gas setting ... 26
6.3.1 Checking for tightness of the flue gas installation and flue gas recirculation ... 27
6.3.2 Checking the gas flow rate ... 27
6.3.3 Checking the gas inlet working pressure ... 28
6.4 Checking the appliance function ... 28
6.4.1 Heating ... 29
6.4.2 Cylinder charging ... 29
6.5 Handing over the boiler to the operator ... 29

7 Adapting the boiler to the heating installation ... 31
7.1 Selection and setting of parameters ... 31
7.2 Overview of adjustable system parameters ... 31
7.2.1 Setting the heating partial load ... 33
7.2.2 Setting of pump overrun and pump operating mode ... 33
7.2.3 Setting of maximum flow temperature ... 33
7.2.4 Setting of burner anti-cycling time ... 33
7.2.5 Determination of maintenance interval/maintenance display ... 34

8 Inspection and maintenance ... 35
8.1 Inspection and maintenance intervals ... 35
8.1.1 General inspection and maintenance instructions ... 35
8.1.2 Safety instructions ... 36
8.1.3 Checking the CO_2 concentration ... 36
8.1.4 Adjusting the CO_2 concentration (or the air ratio) ... 37
8.1.5 Inspection and maintenance work steps ... 38
8.2 Filling/draining the boiler and heating installation ... 39
8.2.1 Filling the boiler and the heating installation ... 39
8.2.2 Draining of the boiler ... 39
8.2.3 Draining the entire system ... 39
8.3 Maintenance of the compact thermal module ... 39
8.3.1 Dismounting the compact thermal module ... 39
8.3.2 Cleaning the heat exchanger ... 40
8.3.3 Checking the burner ... 40
8.3.4 Installing the compact thermal module ... 41
8.4 Cleaning the condensate siphon ... 41
8.5 Cleaning the condensate ducts ... 42
8.6 Cleaning the air separation system ... 42
8.6.1 Cleaning the filter ... 42
8.6.2 Cleaning the air separator ... 42

8.7 Checking the charge pressure of the external expansion vessel ... 42
8.8 Checking gas connection pressure (gas inlet working pressure) ... 43
8.9 Checking the CO_2 concentration ... 43
8.10 Test operation ... 43

9 Troubleshooting ... 43
9.1 Diagnostics ... 43
9.1.1 Status codes ... 43
9.1.2 Diagnosis codes ... 44
9.1.3 Fault messages ... 47
9.1.4 Fault memory ... 47
9.2 Check programs ... 49
9.3 Resetting parameters to factory settings ... 49

10 Replacing components ... 50
10.1 Safety instructions ... 50
10.2 Replacing the burner ... 50
10.3 Replacing the fan or the gas valve ... 50
10.4 Replacing the heat exchanger ... 51
10.5 Replacing PCB and display ... 52

11 Vaillant Service ... 52

12 Recycling and disposal ... 52
12.1 Boiler ... 52
12.2 Packaging ... 52

13 Technical data ... 53

Benchmark Commissioning and Servicing Section . 54

1 Notes on the documentation

The following instructions are intended to help you throughout the entire documentation.
Further documents apply in combination with this installation and maintenance manual.
We accept no liability for any damage caused by non-observe these instructions.

Other applicable documents and service auxiliaries

- Always observe all installation instructions for structural parts and components of the system when installing the ecoTEC VU. These installation instructions are enclosed with the various system components as well as additional components.
- Also observe all the operating instructions included with the system components.

Auxiliary service equipment:
The following test and measuring equipment is required for inspection and maintenance:
- CO_2 measuring instrument
- U tube manometer or digital

The manuals for any accessories and controllers used also apply.

1.1 Storage of documents

Please pass on these installation and maintenance instructions and all other applicable documents to the operator of the installation who is responsible for keeping these documents for future reference when required.

1.2 Safety instructions and symbols

Please observe the safety instructions in this manual for the installation of the appliance!
The symbols used in the manual are explained below:

Danger!
Immediate risk of serious injury or death!

Danger!
Danger of death by electric shock!

Danger!
Danger of burning or scalding!

Caution!
Potentially dangerous situation for the product and environment!

Note!
Useful information and instructions.

- Symbol for a necessary task

1.3 Validity of the instruction manual

These installation instructions apply exclusively to the boiler with the following part number:

Type designation	Article number
ecoTEC VU GB 466/4-5 H	0010004139

Table 1.1 Type designation and article number

The article number of the boiler can be found on the identification plate.

2 Description of the boiler

2.1 Design

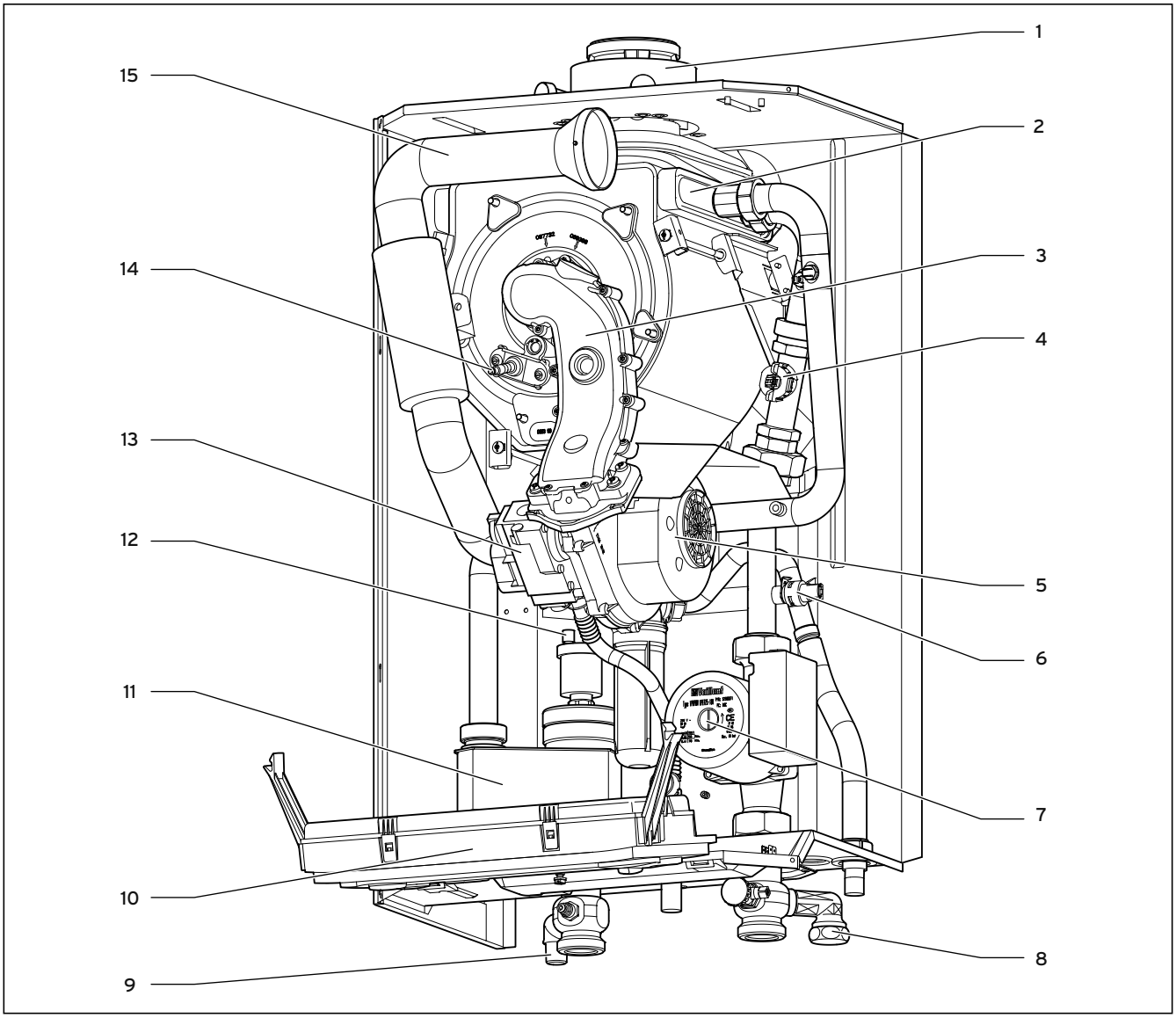

Fig. 2.1 Functional components

Legend:
1 Connection for the air/flue gas duct
2 Heat exchanger
3 Compact thermal module
4 Flow rate sensor
5 Fan
6 Water pressure sensor
7 Pump
8 Connection for expansion vessel
9 Connection for expansion relief valve
10 Electronic box
11 Air separation system
12 Automatic air vent
13 Gas valve
14 Ignition electrode
15 Air intake pipe

Note!
When using accessories observe the minimum gaps/mounting clearances (see Chapter 4.5).

2.2 Type summary

Boiler type	Designated country (designation in accordance with ISO 3166)	Category of permit	Type of gas	Nominal heat output range P (kW)
ecoTEC VU GB 466/4-5 H	GB (Great Britain) IE (Eire)	II_{2H3P}	Natural gas H - G 20 - 20 mbar Propane - G 31 - 37 mbar	12.3 – 44.1 (80/60 °C) 12.5 – 45.0 (60/40 °C) 12.9 – 46.4 (50/30 °C) 13.3 – 47.7 (40/30 °C)

Table 2.1 Type summary

2.3 CE label

The CE label shows that the products comply with the basic requirements of all applicable directives as stated on the identification plate.

The declaration of conformity can be viewed at the manufacturer's site.

2.4 Benchmark

Note!
Vaillant Ltd. supports the Benchmark Initiative. You will find the Benchmark Logbook on the last pages of this instruction manual. It is very important that this document be filled out properly when installing, commissioning and handing-over to the operator of the installation.

benchmark
COLLECTIVE MARK
THE MARK OF QUALITY FOR THE INSTALLATION, COMMISSIONING AND SERVICING OF DOMESTIC HEATING AND HOT WATER SYSTEMS

2.5 Intended use

There is a risk of injury or death to the user or others, or of damage to the product and other property in the event of improper use or use for which it is not intended.

The product is intended as a heat generator for closed hot water central heating installations and for hot water generation. The products referred to in this manual must only be installed and operated in conjunction with the accessories listed in the associated flue pipe installation manual.

Intended use includes the following:
- observance of accompanying operating, installation and servicing instructions for Vaillant products as well as for other parts and components of the system
- installing and fitting the product in accordance with the product and system approval
- compliance with all inspection and maintenance conditions listed in the instructions.

The use of the product in vehicles, such as mobile homes and caravans, is not classed as intended use. Units that are not classed as vehicles are those that are installed in a fixed and permanent location and that do not have any wheels (known as "fixed installation").

Any other use that is not specified in these instructions, or use beyond that specified in this document, shall be considered improper use. Any direct commercial or industrial use is also deemed to be improper.

The manufacturer/supplier is not liable for any claims or damage resulting from improper use. The user alone bears the risk.

Caution!
Improper use of any kind is prohibited.

2.6 Identification plate

The data badge of the Valliant ecoTEC is attached at the factory to the bottom of the boiler.

3 Safety instructions and regulations

3.1 Safety instructions

3.1.1 Installation and setting

Installation, adjustments and maintenance and repairs to the boiler may only be carried out by a recognised skilled trade company.

Caution!
To tighten or loosen screw connections, only use suitable open-ended spanners (do not use pipe spanners, extensions, etc.).
Improper use or unsuitable tools can cause damage, such as gas or water leaks.

3.1.2 Gas odour

If you smell gas, the following safety instructions must be observed:
- Open doors and windows wide, provide for ventilation, stay out of rooms where smell of gas is present!
- Avoid naked flames, do not smoke, do not use pocket lighters!

- Do not use electric switches, plugs, doorbells, telephones and other communication systems in the building!
- Close gas meter isolator device or main isolator device!
- Warn other building residents, but do not ring doorbells!
- Vacate the building!
- If a gas leak is audible, immediately leave the building, prevent others from entering the building, notify the police and fire brigade from outside the building!
- Notify the gas supply company or National Grid Transco 0800 111999 by telephone from outside the building!

3.1.3 Changes to the surroundings of the boiler

Changes may not be made to the following equipment:
- the heating appliance,
- gas, supply air, water and power lines– flue gas removal system,
- drain line and expansion relief valve for heating water,
- constructional conditions that could affect the operational reliability of the boiler.

3.1.4 Important information regarding propane-fired appliances

Bleeding the liquid gas tank when installing the system: before installing the appliance, make sure that the gas tank has been bled. The liquid gas supplier is responsible for proper ventilation of the tank. Ignition problems can result if the tank is not bled properly. In such cases, first contact the person in charge of filling the tank.

Note!
Also observe the information on conversion to liquid gas in Chapter 6.3 of this manual.

Caution!
If the incorrect type of gas is used this cause ignition and combustion noise and fault shutdowns!
Only use propane gas G 31.

3.2 General requirements

3.2.1 Related documents

The installation of the boiler must be in accordance with the relevant requirements of Gas Safety (Installation and Use) Regulations 1998, Health and Safety Document No. 635 (The Electricity at Work Regulations 1989), BS7671 (IEE Wiring Regulations) and the Water Supply (Water Fitting) Regulations 1999, or The Water Bylaws 2000 (Scotland). It should also be in accordance with the relevant requirements of the Local Authority, Building Regulations, The Building Regulations (Scotland). The Building Regulations (Northern Ireland) and the relevant recommendations of the following British Standards:

BS 6700: Services supplying water for domestic use within buildings and their curtilages.
BS 6798: Specification for installation of gas fired boilers not exceeding 60 kW input.
BS 6891: Specification for installation of low pressure gas pipework up to 28 mm (R1) in domestic premises (2nd family gas).
BS 7593: Treatment of water in domestic hot water central heating installations.
Institute of Gas Engineers Publication **IGE/UP/7/1998:** „Guide for gas installations in timber framed housing"
BS. 5482 Pt. 1 Domestic butane and propane gas burning installations.
IGE/UP1 Soundness testing and purging of industrial and commercial gas installation.
IGE/UP2 Gas installation pipework, boosters and compressors on industrial and commercial premises. IGE/UP10 Installation of gas appliances in industrial and commercial premises.
BS. 6644 Installation of gas fired hot water boilers of rated inputs between 60 kW and 2 MW (2nd and 3rd family gases).
BS. 5449 Forced circulation hot water central heating installations for domestic premises. Note: only up to 45 kW.
BS. 6880 Low temperature hot water heating installations
of output greater than 45 kW.
Part 1Fundamental and design considerations.
Part 2 Selection of equipment.
Part 3 Installation, commissioning and maintenance.
BS. 4814 Specification for: Expansion vessels using an internal diaphragm, for sealed hot water heating installations.
BS. 5440 Installation and maintenance of flues and ventilation for gas appliances of rated input not exceeding 70 kW net (1st, 2nd and 3rd family gases).
Part 2 Specification for installation of flues.
Part 3 Specification for installation and maintenance of ventilation for gas appliances.

3.2.2 Installation site

The location chosen for the boiler must permit the provision of a satisfactory flue termination. The location must also provide adequate space for servicing and air circulation around the boiler. The boiler may be installed in any room, although particular attention is drawn to the requirements of BS 7671 (IEE Regulations), the electrical provisions of the Building Regulations (Scotland) and in IE the current edition of IS 813 and the current ETCI rules, in respect of the installation of a boiler in a room containing a bath or shower.

Note!
Where a room sealed boiler is installed in a room containing a bath or shower, any electrical switch or boiler control utilising mains electricity should be so situated that it cannot be touched by a person using the bath or shower.

In case of installation of the boiler in an unusual location, special procedures may be necessary and BS 5546 and BS 6798 give detailed guidance on this aspect. The boiler must be mounted on a flat, vertical wall, which must be sufficiently robust to take the weight of the boiler.
The boiler may be installed on a combustible wall, subject to the requirements of the Local Authorities and Building Regulations. A compartment used to enclose the boiler must be designed and constructed specifically for this purpose. (An existing cupboard or compartment may be used provided that it is modified for the purpose). Details of essential features of cupboard/compartment design including airing cupboard installations are given in BS 6891. In IE the current edition of IS 813.

Note!
If the boiler is to be installed in a timber framed building, it should be fitted in accordance with "IGE/UP/7 Edition 2 Gas installations in timber framed and light steel framed buildings".

3.2.3 Gas supply

The gas supplier should ensure the availability of sufficient gas flow rate. A gas meter may only be connected to the service pipe by the supplier of gas or their contractor. An existing meter should be checked to ensure that it is capable of passing the rate of gas supply required. Installation pipes should be fitted in accordance with BS 6891, in IE in accordance with the current issue of IS 813. Pipework from the meter to the boiler must be of an adequate size. Do not use pipes of a smaller size than the boiler gas connection. The complete installation must be tested for lacks of tighness and bled as described in BS 6891.

3.3 Air/flue gas duct

Danger!
Vaillant appliances are only system-certified if genuine Vaillant air/flue gas ducts are used. Only use genuine Vaillant air/flue gas ducts. Malfunctions can occur if you use other accessories. These may result in damage and injury. You will find a list of genuine air/flue gas ducts in the Vaillant installation manual for air/flue gas ducts. The CE mark is valid only if the appliance is operated with Vaillant air/flue gas ducts.

Only for commercial appliances:
For installations in cascade arrangement using the appliance type B23p a common non-Vaillant flue system serving more than one appliance shall be used. The requirements of the flue installation instructions must be met.

3.3.1 Standard 125 mm air/flue gas duct

A concentric air/flue gas duct which has an outside diameter of 125 mm and can be extended up to a length of 21 m is available.
You can also get a vertical system. For more information refer to the installation manual for the air/flue gas duct.

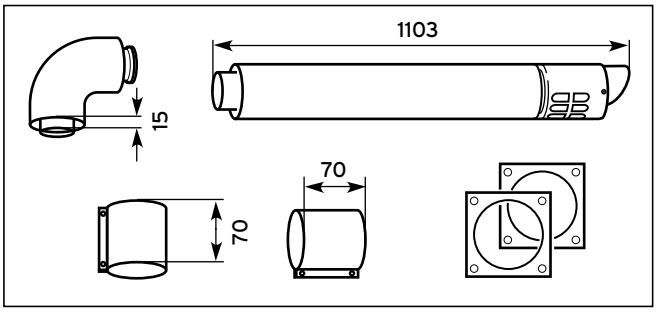

Fig. 3.1 Item No. 303 209

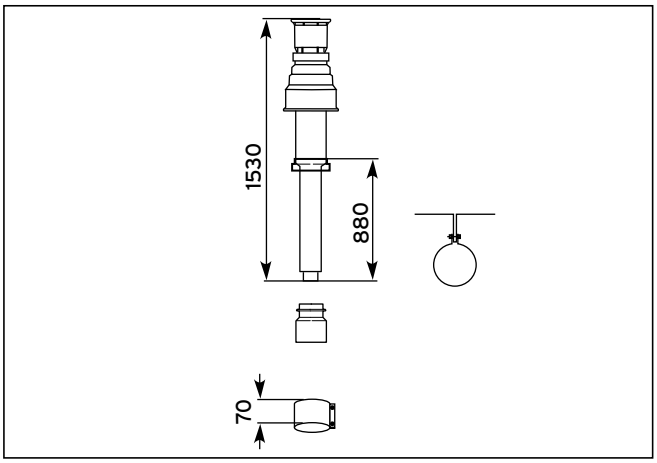

Fig. 3.2 Item No. 303 200

3.3.2 Flue termination

The following details refer to both flue systems.

a. The terminal must be positioned such that the products of combustion can disperse freely at all times.
b. A plume of water vapour will sometimes be visible from the flue terminal. Positions where this could be a nuisance should be avoided.
c. If the terminal is fitted less than 2 m above a balcony, above ground or above a flat roof to which people have access then a suitable terminal guard must be provided and fitted (contact Tower Flue Components, Tonbridge, TN9 1TB).

Note!
Vertical flues must not terminate within 600 mm of an openable window, air vent or any other ventilation terminal.

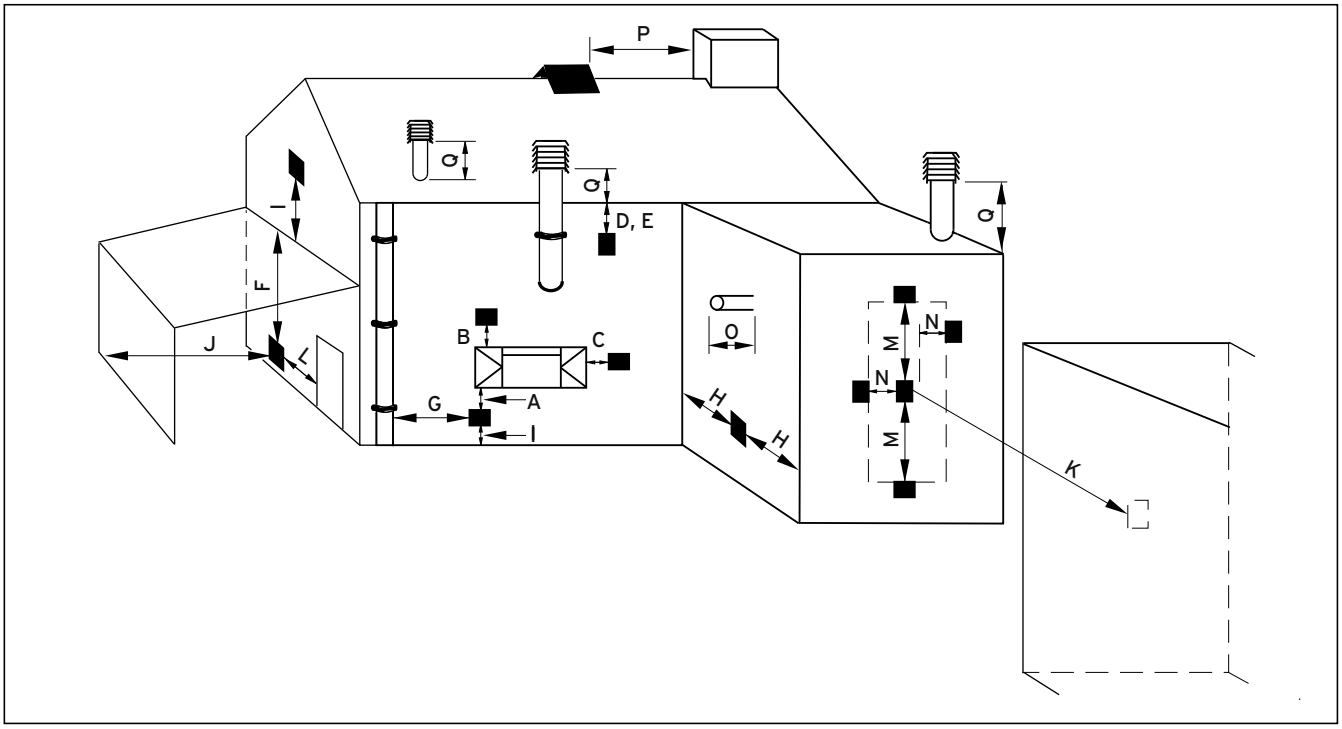

Fig. 3.3 Termination of the air/flue gas duct

The flue system shall be so placed or shielded as to prevent ignition or damage to any part of the building.

	Location	Minimum dimensions
A	Directly below an opening, air brick, opening windows, etc.	300 mm
B	Above an opening, air brick, opening window, etc.	300 mm
C	Horizontally to an opening, air brick, opening window, etc.	300 mm
D	Below temperature-sensitive building components e.g. plastic gutters, soil pipes or drain pipes	75 mm
E	Below eaves	200 mm
F	Below balconies or car port roof	200 mm
G	From a vertical drain pipe or soil pipe	150 mm
H	From an internal or external corner	200 mm
I	Above ground, roof or balcony level	300 mm
J	From a surface facing the terminal	600 mm
K	From a terminal facing the terminal	1200 mm
L	From an opening in the car port (e.g. door, window) into the dwelling	1200 mm
M	Vertically from a terminal on the same wall	1500 mm
N	Horizontally from a terminal on the same wall	300 mm
O	From the wall on which the terminal is mounted	N/A
P	From a vertical structure on the roof	N/A
Q	Above intersection with roof	300 mm

Table 3.1 Position of the termination in a fan-assisted air/flue gas duct

Note!
In addition, the terminal should not be nearer than 300 mm to an opening in the building fabric formed for the purpose of accommodating a built-in element such as a window.

BS 5440-1 It is recommended that the fanned flue terminal should be positioned as follows:

a) at least 2 m from an opening in the building directly opposite, and
b) so that the products of combustion are not straightly directed to discharge across a boundary.

1) Dimensions D, E and F:
   These clearances may be reduced to 25 mm without affecting the performance of the boiler. In order to ensure that the condensate plume does not affect adjacent surfaces the terminal should be extended as shown in Fig. 3.3.
2) Dimension H:
   This clearance may be reduced to 25 mm without affecting the performance of the boiler. However, in order to ensure that the condensate plume does not affect adjacent surfaces a clearance of 300 mm is preferred. For IE, recommendations are given in the current edition of IS 813.

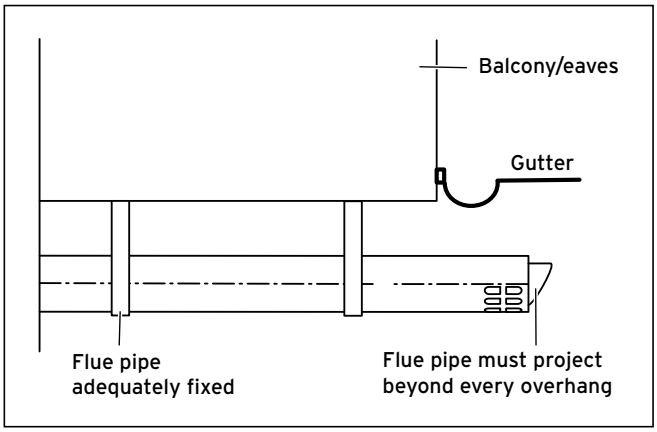

Fig. 3.4 Termination of air/flue gas duct under balcony or eaves

3.4 Air supply

Detailed recommendations for air supply are given in BS 5440: Part 2. It is not necessary to have an air vent in the room or internal space in which the boiler is installed.

3.5 Compartment ventilation

The boilers are very high efficiency appliances. As a consequence the heat loss from the appliance casing during operation is very low. Compartment ventilation is required if the flue used is not concentric and air is supplied from the room or compartment the boiler is installed in.

3.6 Electrical supply

A 230 V, ~ 50 Hz single phase electricity supply fused to 3 Amp. must be provided in accordance with the latest edition of BS7671 (IEE Wiring Regulations) and any other local regulations that may apply. In IE reference should be made to the current edition of the ETCI rules. The method of connection to the mains electricity supply must provide a means of completely isolating the boiler and its ancillary controllers. Isolation is preferably by the use of a fused three pin plug and unswitched shuttered socket outlet, both complying with the requirements of BS 1363. Alternatively, a 3 Amp. fused doublepole switch with a 3 mm contact opening on both poles may be used.

Danger!
Risk of fatal electric shock!
The boiler must be earthed.

4 Assembly

Caution!
Flush the heating installation thoroughly before installing the boiler to remove foreign substances such as solder and flux residue, leftover sealant or dirt.

4.1 Scope of delivery

The Vaillant ecoTEC is delivered pre-mounted in a package unit.
Check that all parts have been delivered and are intact (see Fig. 4.1 and Table 4.1).

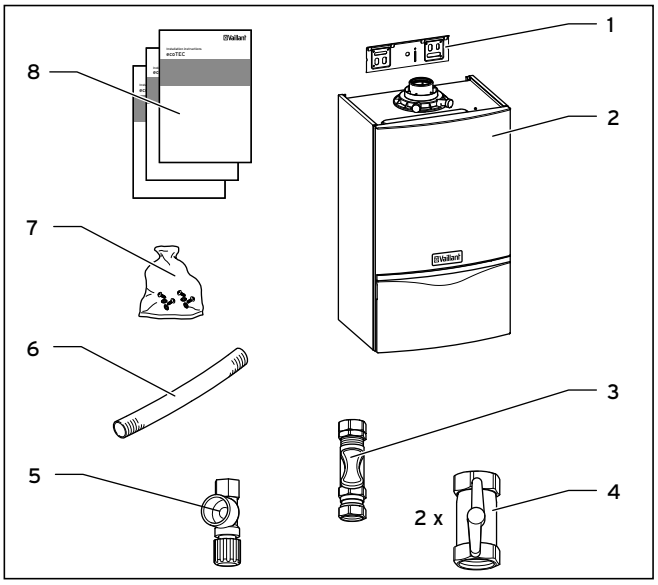

Fig. 4.1 Scope of delivery

Position	Number	Name
1	1	Hanging bracket
2	1	Boiler
3 4 5	1 2 1	Connection accessories: - Gas isolation valve - Drain valves - Expansion relief valve - Seals (without Fig.)
6	1	Condensate drainage pipework
7	1	Bag containing hardware (assembly kit): - 2 wood screws - 2 wall plugs 10 x 60 mm - 2 washers - 1 seal - 1 crimp connection
8	1	Bag with printed documents: – Installation and maintenance instructions – Operating manual – Installation instructions, air/flue gas duct system - Installation template - Changeover sign for liquid gas - Miscellaneous stickers

Table 4.1 Scope of delivery

4.2 Accessories

Optional accessories for use in conjunction with the installation and operation of the boiler are available.

4.3 Installation site

Please note the safety instructions below before choosing where to install the boiler:

Caution!
Do not install the boiler in rooms prone to frost. In rooms with aggressive steam or dust, the boiler must be operated room sealed!

When choosing the installation site and while operating the boiler, make sure that the combustion air is technically free of chemical substances containing fluorine, chlorine, sulphur etc. Sprays, solvents and cleaning agents, paints, adhesives etc. contain these kinds of substances, which may lead in the worst case to corrosion, also in the flue system, during open flued operation of the boiler.
Using an old chimney of an oil fired boiler may also cause this problems.
The boiler must be operated room sealed, particularly in hairdressing salons, carpenter's shops, or paint shops and cleaning companies. Otherwise, a separate installation room is required to guarantee that the combustion air supply is technically free of the substances mentioned above.

Select boiler position

Refer to Chapter 'Installation site' for information regarding the siting of the boiler. In general the boiler must be positioned such that:

- There is sufficient space around the boiler for service and maintenance.
- The boiler can be correctly flued, i.e. the flue terminal position is sited in accordance with these instructions and the air/flue duct can be installed in accordance with the flue installation instructions supplied.
- All necessary pipework can be connected, including the expansion relief valve and condensate drain.

4.4 Dimension drawing and connection dimensions

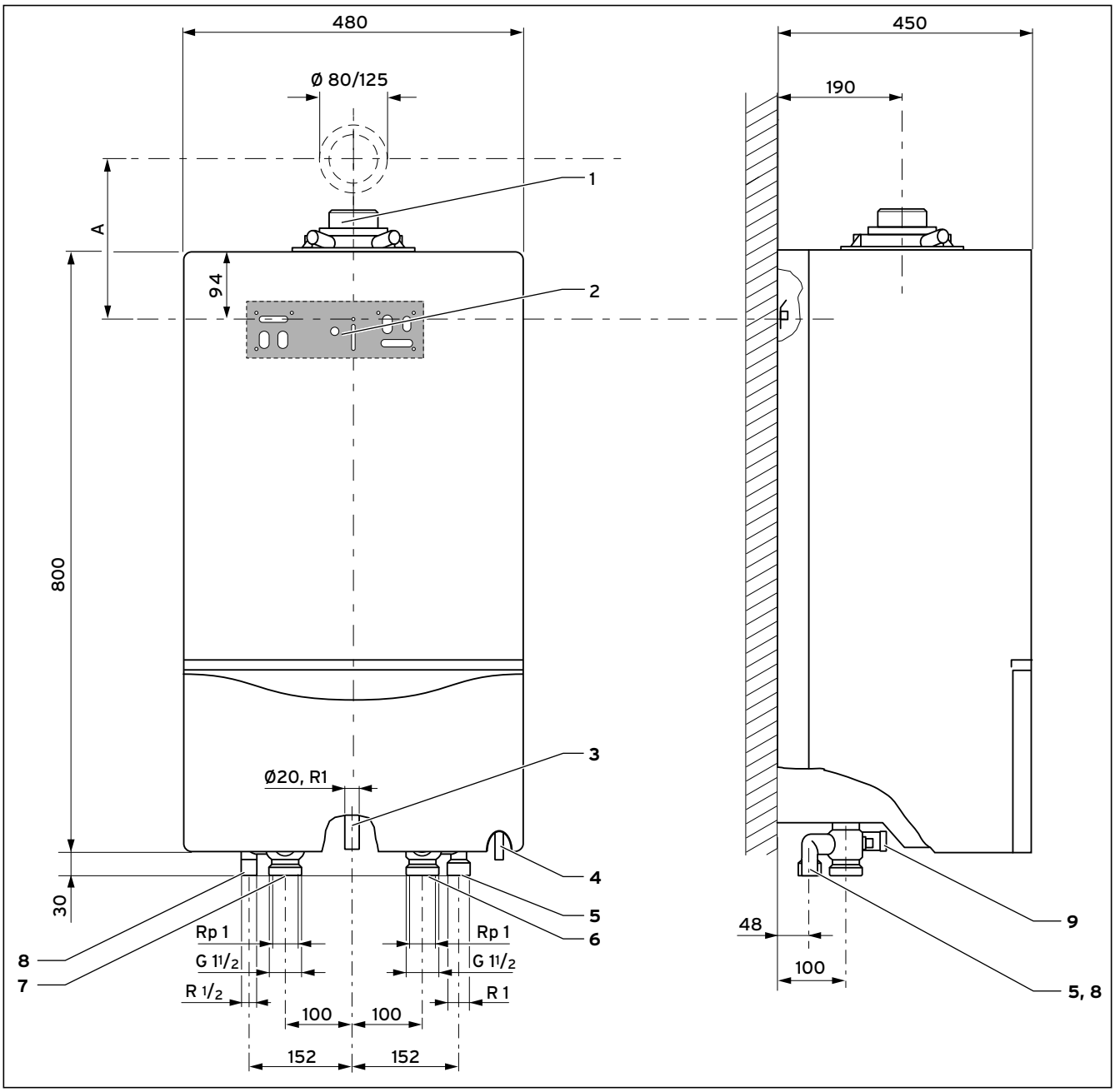

Fig. 4.2 Connection dimensions in mm

Legend:

1 Flue gas connection, 80/125 mm diameter, dimension A (hanging bracket – centre of air/flue gas pipe) with 87° elbow: 253 mm
2 Hanging bracket
3 gas pipe, 20 mm diameter, gas connection R1"
4 Connection for condensate drainage pipework
5 Connection for expansion vessel
6 Connection for heating return
7 Connection for heating flow
8 Connection for expansion relief valve
9 Filling device (combined filling and emptying valve)

☞ **Note!**
When using accessories observe the minimum gaps/mounting clearances (see Chapter 4.5).

4.5 Required minimum gaps/ installation clearances

For the installation/assembly of the boiler as well as for carrying out future maintenance tasks, you need the minimum gaps and installation clearances given below:

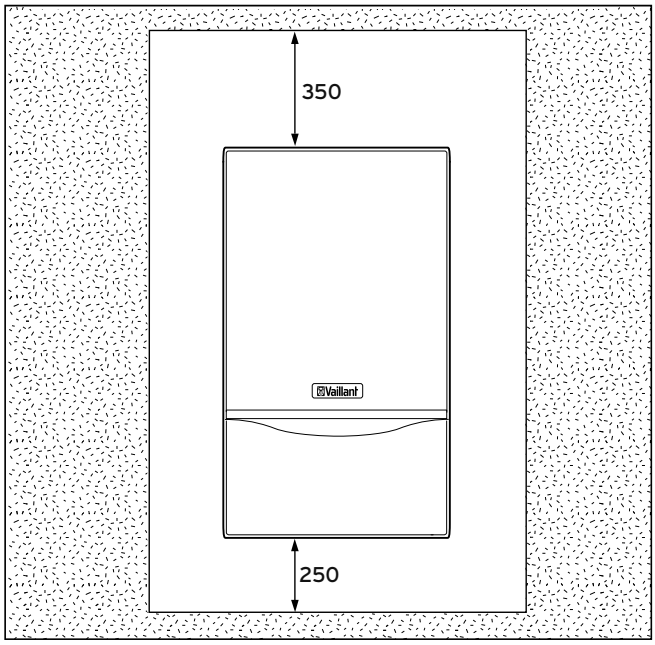

Fig. 4.3 Required minimum gaps/installation clearances

It is not necessary to ensure a particular clearance between the boiler and combustible materials or components as the temperature of the boiler will always be less than the maximum permissible temperature of 85 °C at its rated heating output. You need a minimum of 600 mm clearance in front of the boiler to enable easy access for servicing. This may be provided by an openable door.

4.6 Using the installation template

Only use the assembly template provided to mount the boiler.

- Align the installation template vertically and fix it to the wall.
- Mark the positions of the drill holes for the hanging bracket and also the position of the wall opening for the air/flue gas duct on the wall.
- Remove the assembly template from the wall.
- Drill 2 holes for the hanging bracket in the wall, each with a diameter of 8 mm.
- If necessary cut the aperture in the wall for the air/ flue gas duct.

4.7 Mounting the boiler

Caution!
When assembling the boiler make sure that the fixing point has a sufficient load-bearing capacity. Also take the condition/nature of the wall into account.

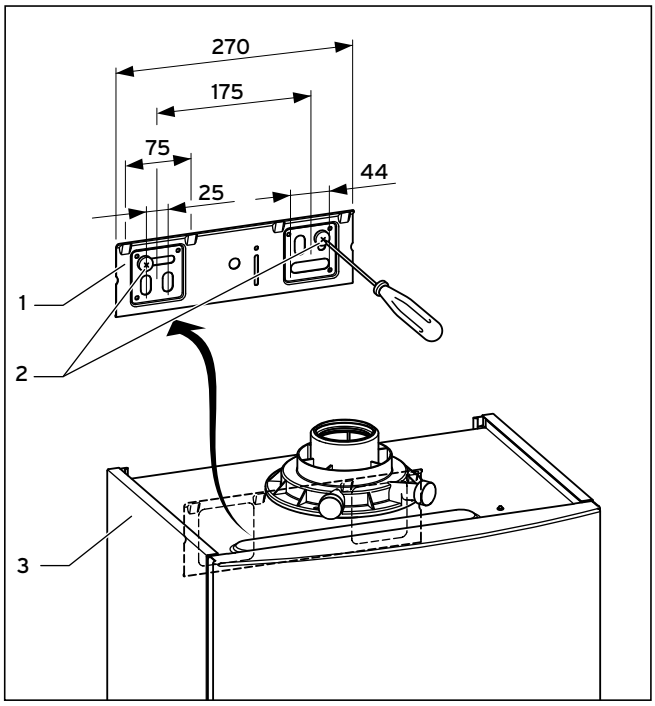

Fig. 4.4 Mounting the boiler

- Mount the hanging bracket (**1**) on the wall using the wall plugs and screws (**2**) provided with the boiler.
- Hang the boiler (**3**) on the hanging bracket from above using the suspension bracket.

4.8 Removing/attaching the front casing

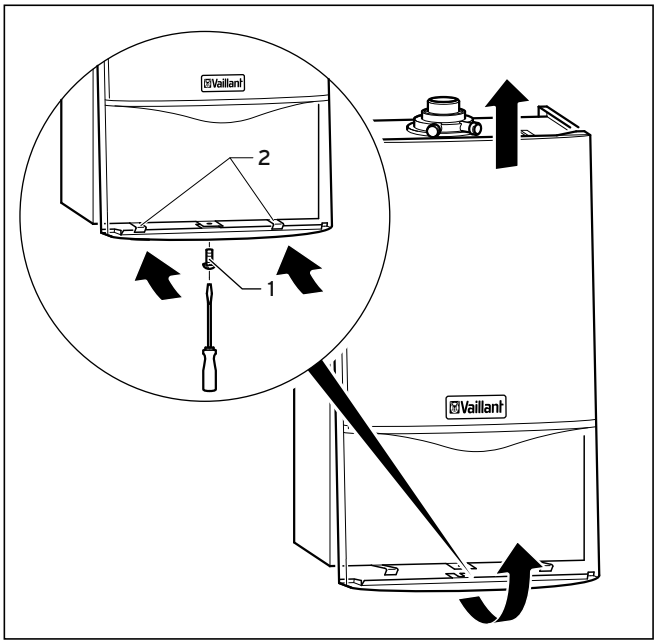

Fig. 4.5 Removing the front casing

To dismount the front casing of the boiler, proceed as follows:
- Unfasten the screw (**1**) on the bottom of the boiler.
- Push in both retaining clips (**2**) on the bottom of the boiler so that the front casing is released.
- Pull the casing forwards by its bottom edge and lift the casing up and off.

To mount the front casing of the boiler, proceed as follows:
- Place the casing thus on the upper boiler edge that casing and boiler edges engage.
- Push the casing onto the boiler so that both retaining clips (**2**) engage with the casing.
- Fix the casing by tightening the screw (**1**) on the bottom of the boiler.

5 Installation

Danger!
Danger of injury to persons and/or material damage due to improper installation!
The Vaillant ecoTEC boiler may only be installed by a recognised skilled trade company. who also assumes the responsibility for proper installing and initial start-up of the boiler.

Caution!
The ecoTEC VU 466 must be used with a suitably sized low loss header.

Selection of the low loss header
The low loss header uncouples the boiler from the heating installation. A sufficiently large water volume is constantly supplied through the boiler via the low loss header in conjunction with the boiler circulation pump. It acts as a neutral point in the system and has minimal hydraulic resistance, therefore the boiler circulation pump does not affect the circuit pumps and vice-versa.

A suitable WH type low loss header can be chosen from Table 5.1.

	Temperature spread of heating installation		
Output of heating installation	**10 K**	**15 K**	**20 K**
Stand-alone boiler	WH 95	WH 40	WH 40
Two cascade arrangement	WH 160	WH 95	WH 95
Three cascade arrangement	WH 280	WH 160	WH 160
Four cascade arrangement	WH 280	WH 160	WH 160

Table 5.1 Selection of the low loss header

Note!
We strongly recommend the installation of a suitably sized quality dirt filter in the return pipe work to the low loss header (not to the boiler!) particularly in the case of old systems. This will help to prevent any system water contamination from entering and blocking the boiler and producing an additional high pressure loss.

No electrical accessories are required in order to use a low loss header. Simple systems can be connected directly inside the electronic box.

Model	Article number	Connection Sizes 1	Header width A	Header depth B	Total height C	Insulation dimensions	To boiler D	To heating circuit E	Height from floor F	Maximum volume flow m^3/hr
WH 40	306720	1 $^1/_4$" BSP (f)	115	115	500	115/115	280	340	n/a	3.5
WH 95	306721	2" BSP (f)	155	155	750	155/155	470	540	n/a	8
WH 160	306726	DN65	520*	120	1350	220/220	900	900	300	12
WH 280	306725	DN80	600*	160	1390	260/260	930	930	300	21.5

Table 5.2 Low loss headers dimensions

All dimensions in mm
* = distance between flanges

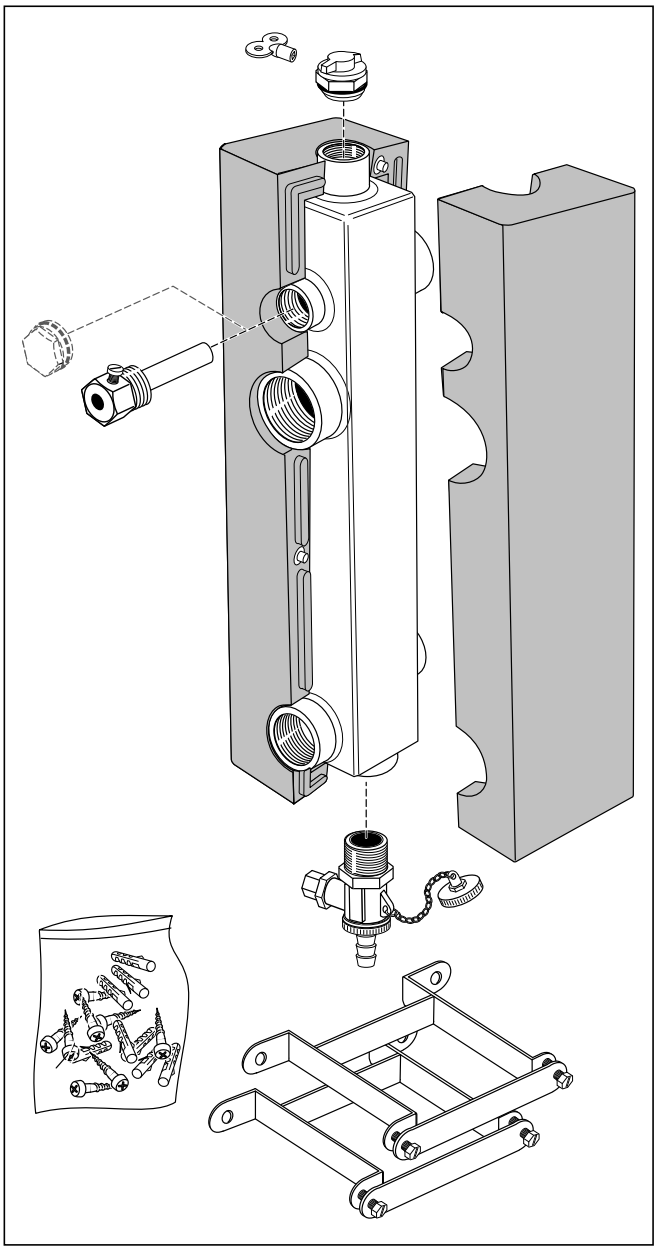

Fig. 5.1 Low loss header

Safety devices

- The outlet of the expansion relief valve must be suitably terminated in accordance with BS 6798 or BS 6644.
- The boiler is suitable for connection to plastic centralheating pipes. In this connection preferably 1.5 m copper pipes should be used prior to the transition to the plastic pipes for the connection to the boiler.
- Should a system be found to include non-oxygen barrier pipe then it is essential that a plate heat exchanger be installed in between the boiler and the non-oxygen barrier pipe, thus preventing corrosion. It is essential that the boiler and the system have provision for water make up and expansion.

For more detailed information on examples of systems and system equipment contact your Vaillant sales support point.

Caution!
The following system diagrams are schematic representations. They cannot be regarded as a substitute for professional planning! The system diagrams do not include the isolator and safety devices that are required to carry out a professional installation. Observe the applicable standards and guidelines.

The boiler can be installed in three different configurations:

- heat only,
- cylinder only, and
- heating and cylinder.

5.1 Heating mode

In case of only one heating circuit to be operated downstream of the low loss header, this one can directly be controlled by the ecoTEC.
A suitable pump can be selected and installed downstream of the low loss header. You can select a pump that fits to your system (4 m or 6 m pump or electronically controlled pump). In case of systems with multiple circuits please pay additional attention to the control system accessories.

Hydraulic schematic drawing:
Heating circuit connection using low loss header

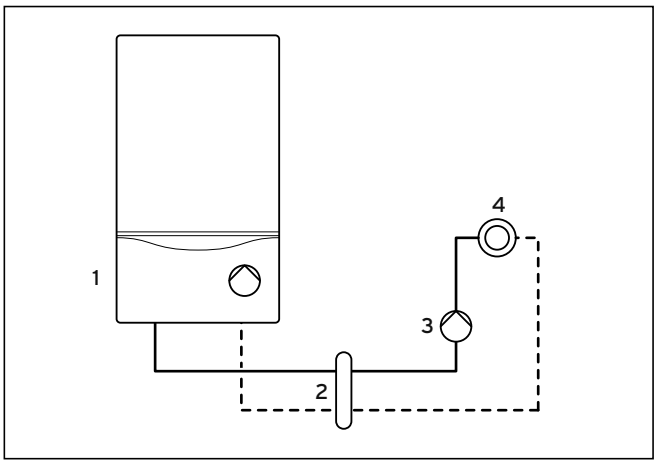

Fig. 5.2 Heating circuit connection using low loss header

Legend:
1 Boiler with internal pump
2 Low loss header
3 External heating pump
4 Consumer (e.g. heating circuit)

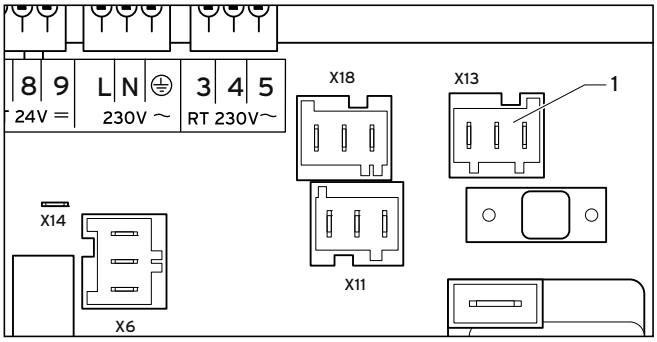

Fig. 5.3 Electrical connection for heating pump downstream of the low loss header

The settings for the internal pump are made at the factory. The pump output does not require adjustment. Use the grey ProE plug to establish the electrical connection with the external heating pump.
To assign the "external heating pump" function to the plug (**1**) (additional relay) diagnosis point "d.26" in the 2nd diagnosis level must be set to the value "2", see Chapter 9.1.2.
The low loss header ensures, in conjunction with the boiler circulation pump, that a sufficiently high minimum quantity of water is always circulating through the boiler.

5.2 Cylinder charging mode

The electronics of the ecoTEC are designed in such a way that one cylinder charging circuit and one heating circuit can be connected directly without the need for accessories.

The charging circuit connection downstream of the low loss header enables the choice of an individual cylinder size and of a charging pump.

Note!
Observe that non-return valves or mixer circuits may be required in order to eliminate cross-flow to other circuits or the effects of high temperatures from the charging circuit.

Hydraulic schematic drawing:
Cylinder priority switching via low loss header

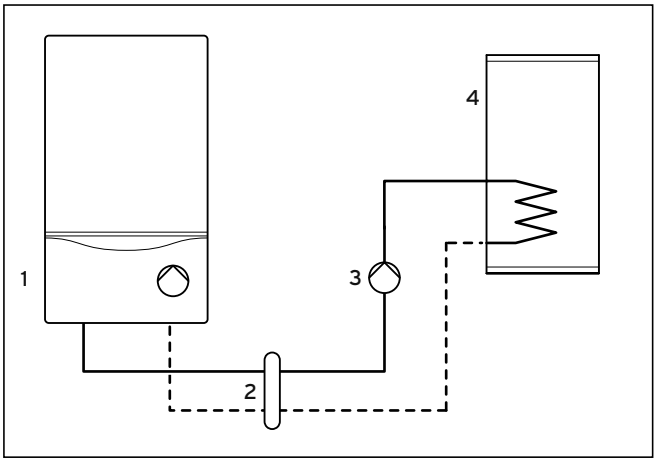

Fig. 5.4 Cylinder priority switching via low loss header

Legend:
1 Boiler with internal pump
2 Low loss header
3 External heating pump
4 Consumer (e.g. charging circuit)

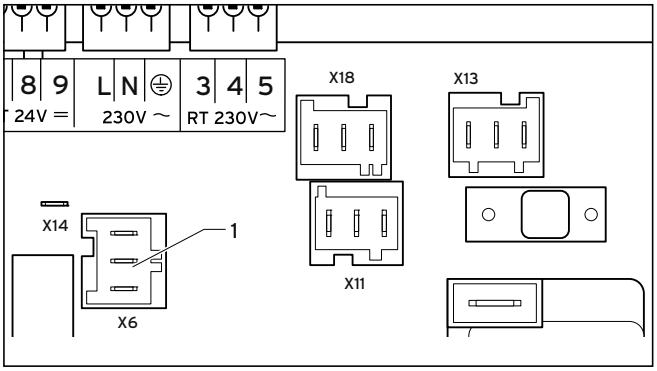

Fig. 5.5 Electrical connection for cylinder charging pump

Use the mounted ProE plug (**1**) to establish the electrical connection for the cylinder charging pump.

The pink plug-in location X6 (1) on the PCB is reserved for the cylinder charging pump. It is not necessary to do settings at any diagnosis point.

The low loss header ensures, in conjunction with the boiler circulation pump, that a sufficiently high minimum quantity of water is always circulating through the boiler.

5.3 Heating mode and cylinder charging mode

Note!
Also observe Chapters 5.1 and 5.2 of this manual.

The combination of heating mode and cylinder charging mode of the boiler can not be equated with either heating mode or cylinder charging mode.
Other hydraulic relationships must be taken into account in order to ensure faultless operation.
The boiler is uncoupled from the consumer circuits by the low loss header. This means that the circuits downstream of the low loss header can be designed according to individual requirements (pump dimension, cylinder position).

Hydraulic schematic drawing:
Cylinder priority switching and heating circuit via low loss header

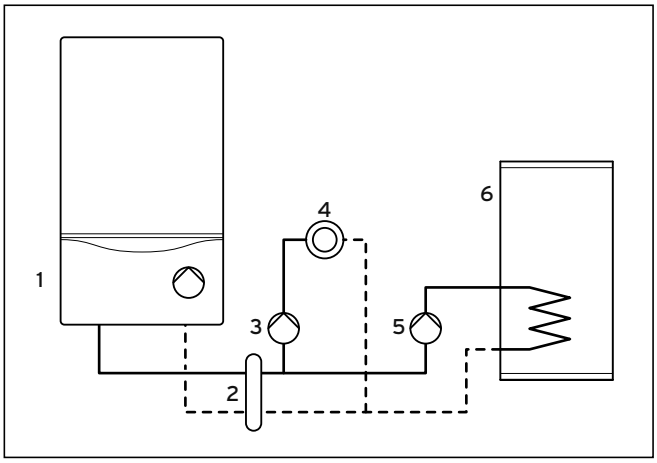

Fig. 5.6 Cylinder priority switching and heating circuit via low loss header

Legend:
1 Boiler with internal pump
2 Low loss header
3 External heating pump
4 Consumer (e.g. heating circuit)
5 External cylinder charging pump
6 Cylinder

One direct heating circuit and one hot water cylinder (including charging pump and non-return valve) can be connected downstream of the low loss header to the ecoTEC boiler without additional equipment. If additional heating circuits are required this can be achieved with the use of optional controllers and hydraulic accessories (e.g. VRC630). The available pump head from the boiler circulation pump is sufficient to pump water around the boiler circuit between the boiler and low loss header. All heating circuits and hot water cylinder configurations can be connected downstream of the low loss header.

Note!
Observe that non-return valves or mixer circuits may be required in order to eliminate cross-flow to other circuits or the effects of high temperatures from the charging circuit.

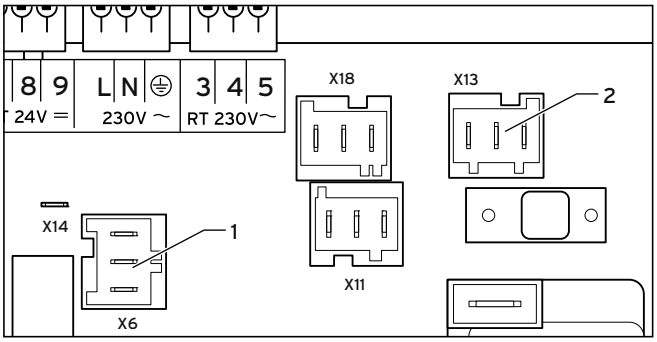

Fig. 5.7 Electrical connection for cylinder charging pump and external heating pump

Legend:
1 Plug-in location for cylinder charging pump
2 Plug-in location for external heating pump

Use the relevant mounted ProE plug to perform the electrical connection.

The pink plug-in location X6 (**1**) on the PCB is reserved for the cylinder charging pump. It is not necessary to do settings at any diagnosis point.

To assign the "external heating pump" function to the grey plug (**2**) (additional relay) the value "2" must be specified at diagnosis point "d.26" in the 2nd diagnosis level, see Chapter 9.1.2.

5.4 Gas connection

Danger!
Danger of injury to persons and/or material damage due to improper installation!
The Vaillant ecoTEC boiler may only be installed by a recognised skilled trade company who also assumes the responsibility for proper installation and initial start-up of the boiler. The legal directives and the local regulations for gas supply companies must be observed.

Caution!
Ensure strainless assembly of the gas pipes to avoid leakages!

Note!
Maintain the same gas pipe dimension all the way to the boiler and avoid reducing the dimension downstream of the gas meter.

Caution!
The gas valve may be damaged if the test pressure or operating pressure is exceeded!
You must check the tightness of the gas valve only using a maximum pressure of 110 mbar!

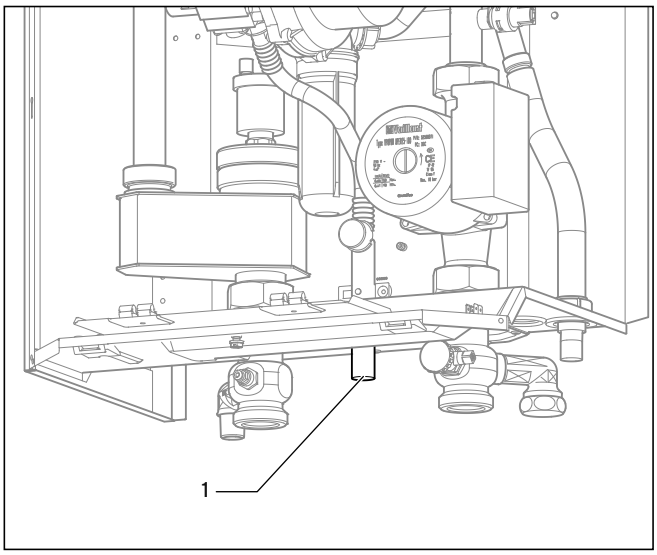

Fig. 5.8 Fitting the gas connection

The boiler must be connected to your gas pipe via a gas isolation valve.

- Screw the boiler's gas supply pipe (**1**) gas-tight with the gas isolation valve (**5**, see Fig. 5.9). To do this, use the R3/4 crimp connection supplied with the boiler. This is also suitable for the connection of a R3/4 gas isolation valve.
- Inspect the gas connection for leakage.

5.5 Heating connection

Caution!
Ensure strainless assembly of the supply lines to avoid leakages in the heating installation!

The boiler is connected to the heating flow and return via service valves.

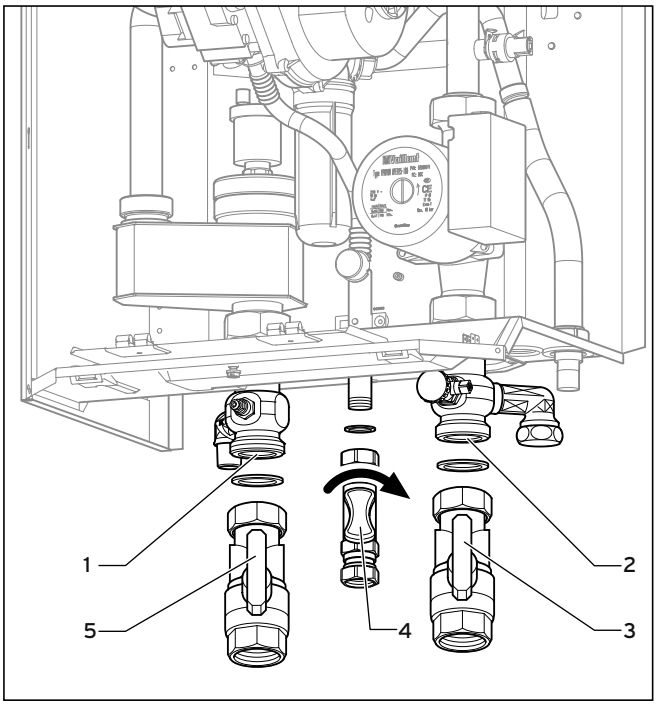

Fig. 5.9 Heating connection

- Fit the flow, return and gas isolation valves (**3**, **4**, **5**) including the seals onto the flow, return and gas pipes. Do not overtighten and ensure the joints are checked for leaks after fitting.

Caution!
It is essential to use the combined filling and emptying valve (3, Fig. 5.10) in the return for filling the boiler without fail, as otherwise the bleeding of the boiler cannot be ensured.

Note!
We recommend the use of seals made of a fibre-based material similar to cardboard instead of materials similar to rubber as the latter can plastically deform and cause pressure losses.

5.6 Expansion relief valve (safety group), heating installation

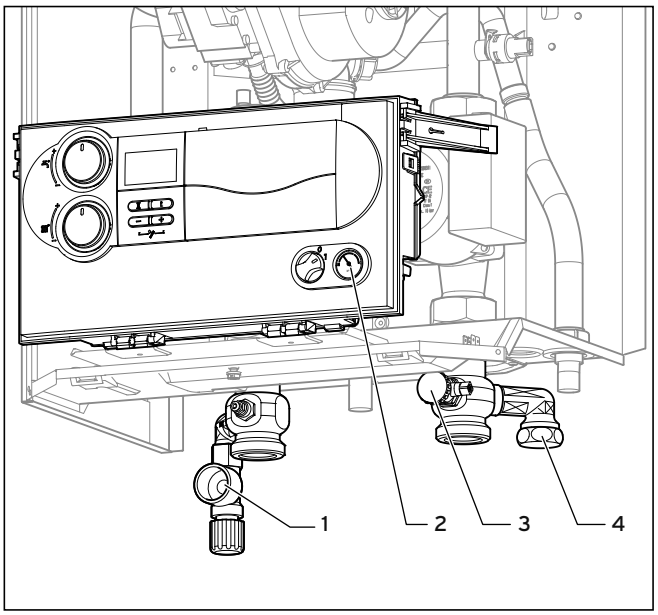

Fig. 5.10 Fitting the expansion relief valve

The ecoTEC is equipped ex factory with connections for a safety group:
- Expansion relief valve (**1**)
- Pressure gauge (**2**)
- Filling device (combined filling and emptying valve) (**3**)
- Connection for expansion vessel (**4**)

As an accessory the expansion relief valve for the heating installation is delivered with the boiler.
- Install the expansion relief valve (**1**).
- Fit a sufficiently sized expansion vessel (to be provided on site) at the designated connection (**4**).

Danger!
Danger of burning and scalding!
The expansion relief valve (1) must be noticeable! Terminate the line in such a way that escaping water or steam cannot cause injury to persons.
Please note that the end of the line must be visible.

Caution!
Risk of damage!
The line should be terminated in such a way that cables or other electrical components cannot be damaged.

5.7 Condensate drainage pipework

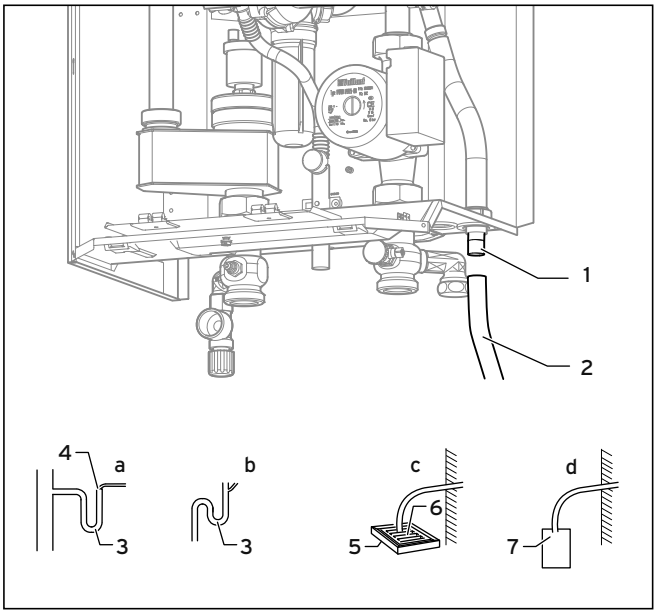

Fig. 5.11 Condensate drainage pipework

Legend:
a Internal stackpipe
b Internal drainage system
c Gully
d Soakaway

The ecoTEC boilers are equipped with a usual condensate collector from which the condensate is continuously removed via the drain pipe.
- Connect the condensate discharge (**1**) of the boiler to a condensate drainage pipework (**2**) which has a minimum internal diameter of 19 mm (22 mm outside diameter for all external pipes) and should be made from an acid-resistant material (e.g. plastic overflow pipe).

Note!
The condensate drainage pipework connected to the condensate discharge of the boiler must have a fall throughout its entire length (45 mm per metre) and should be installed and connected within the building to prevent freezing.

The condensate drainage pipework must terminate in a suitable location, e.g.:

a) Preferably the condensate drainage pipework should run and terminate internally to the house soil and vent stack (at least 450 mm above the invert of the stack). A siphon giving a water seal of at least 75 mm (**3**) (built into the boiler) should be incorporated into the pipe run, and there must be an air break (**4**) in the condensate drainage pipework upstream of the siphon.

The connection to the stack should not be made in a way that could cause cross flow into any other branch pipe, or from that branch pipe into the condensate drainage pipework. This can be achieved by maintaining an offset between branch pipes of at least 110 mm on a 100 mm diameter stack and 250 mm on a 150 mm diameter stack.

b) connecting into the internal drainage branch (e.g. sink waste) with an external termination, the condensate drainage pipework should have a minimum diameter of 22 mm with no length restriction and should incorporate a siphon with a 75 mm **(3)** (built into the boiler) seal. The connection should preferably be made down stream of the sink waste siphon. If the connection is only possible upstream, then an air break is needed between the two siphons. This is normally provided by the sink waste.

c) in a gully **(5)** below grid level **(6)** and above the water level. The external pipe length should be kept as short as possible to minimise the risk of freezing and should not be more than 3 m.

d) at a soakaway (condensate absorption point) **(7)**. The external pipe length should not be more than 3 m.

Further information can be obtained from "BS 6798 Specification for installation of gas-fired boilers of rated input not exceeding 70 kW net".

Danger!
Risk of poisoning due to escaping flue gas!
The condensate drainage pipework must be linked to the waste water piping by an open transition as otherwise the internal siphon could be sucked dry. Before the boiler is switched on the siphon must have been filled with water to prevent flue gas from leaking via the siphon (see Chapter 6.2.3).

5.8 Electrical connection

Danger!
Risk of fatal electric shock through contact with live connections!
The electrical installation may only be carried out by a recognised skilled trade company. Always switch off the power supply first and ensure that it cannot be switched back on unintentionally. Only after this can the installation be undertaken. Mains connection terminals L and N remain live even if the boiler main switch is turned off!

5.8.1 Mains connection

All electrical work shall be carried out by a heating engineer and shall comply with BS 7671 (IEE Regulations).
In IE, reference should be made to the current edition of the ETCI (Electro-Technical Council for Ireland) rules.
The boiler is supplied for connection to 230 V, ~ 50 Hz supply fused at 3 A rating. Connection to the mains supply shall be made via a fused 3 pin plug to an unswitched shuttered socket, both complying with the requirements of BS 1363. (Alternatively, connection may be made via a 3 A fused double pole isolator having a contact opening of at least 3 mm in all poles and supplying the boiler and controllers only). The point of connection to the mains supply must allow complete electrical isolation of the boiler and its ancillary controllers. It should be readily accessible and adjacent to the boiler. A 3 core flexible cord according to BS 6500 tables 6, 8 or 16 (3 x 0.75 to 3 x 1.5 mm^2) should be used.

The nominal voltage of the mains must be 230 V; at mains voltages greater than 253 V and less than 190 V the functions may be impaired.

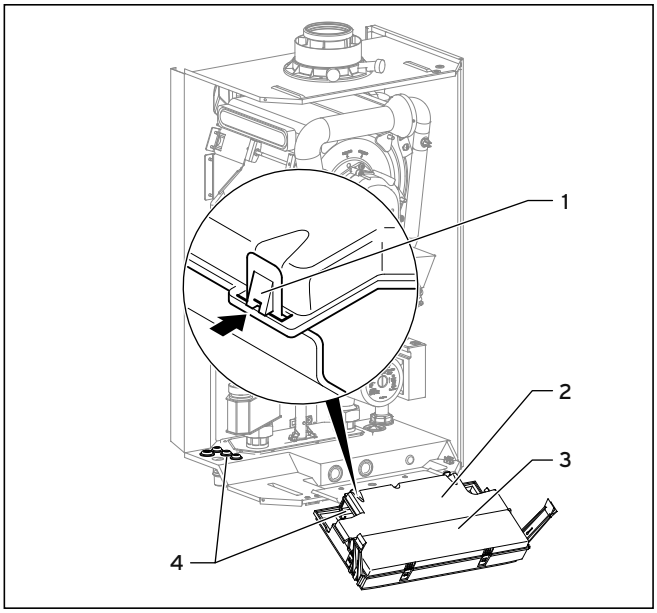

Fig. 5.12 Opening back wall of the electronic box

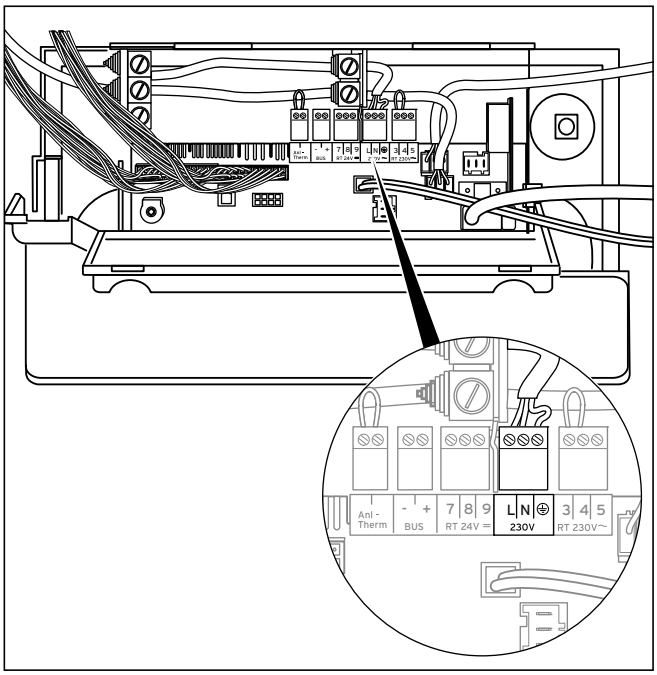

Fig. 5.13 Example for cable routing

- Remove the front casing of the boiler (see Chapter 4.8) and tilt the electronic box (**3**) forwards (see Fig. 5.12).
- Unclip the rear cover (**2**) of the electronic box at the fastening points (**1**) and fold it up.
- Use a commercially available mains connection cable.
- Guide the mains connection cable through a cable duct **(4**). Use the grommet to seal the opening.
- Then feed the mains connection cable into the electronic box and cut the line to the correct length.
- Dismantle the supply line over a length of approximately 2 - 3 cm and strip the insulation off the wires.

Caution!
Supplying power to the wrong plug terminals of the Pro E system can destroy the electronics. Only connect a 230 Vac live supply to boiler terminal connections marked LNE.

- Connect the cores to the plug-in locations in the electronics (L, N and Earth), see Fig. 5.13, using the corresponding ProE plug.
- Close the rear cover of the electronic box until it audibly engages.
- Lift the electronic box up and press the two clips on the left and right of the box against the side casing of the boiler until they audibly engage.
- Mount the front casing (see Chapter 4.8).

5.8.2 Connecting controllers

Mount the controllers in accordance with the corresponding operating and installation manuals.
The required connections to the electronic system of the boiler (e.g. for external controllers, external sensors etc.) should be performed as follows:

- Remove the front casing of the boiler (see Chapter 4.8) and tilt the electronic box (**3**) forwards (see Fig. 5.12).
- Unclip the rear cover (**2**) of the electronic box at the fastening points (**1**) and lift it up (see Fig. 5.12)
- Guide the supply lines of the relevant components to be connected through the cable ducts (**4**) on the bottom of the boiler on the left (see Fig. 5.12)
- Then feed the supply lines into the electronic box and cut the lines to the correct length.
- Dismantle the supply line over a length of approximately 2 - 3 cm and strip the insulation off the wires.
- Connect the cores to the corresponding ProE plugs or plug-in locations of the electronics, as shown in Fig. 5.13.

Caution!
Danger of destroying the electronics!
Do not connect a mains voltage supply to the following terminals: 7, 8, 9, eBUS (+,-)!

Note!
Make sure that the cores are securely fastened to the screw terminals of the ProE plug.

- If a roomthermostat/timer is not connected, you must insert a bridge between terminals 3 and 4, if not already installed. Remove the bridge if you connect a corresponding room/thermostat timer to terminals 3 and 4.
- If a weather-compensated or room temperature control system is connected (continuous control

connection terminals 7, 8, 9) the bridge between terminal 3 and 4 must remain inserted.
- Close the rear cover of the electronic box until it audibly engages.
- Lift the electronic box up and press the two clips on the left and right of the box against the side casing of the boiler until they audibly engage.
- Mount the front casing (see Chapter 4.8).
- To choose pump operating mode 1 (running on of pump) for multi-circuit controllers, change the setting at diagnosis point "d.18" (pump operating mode) from 3 "intermittent" to 1 "run on" (see Chapter 7.2.2).

Observe that the bridge at the ProE plug must be removed when connecting a maximum thermostat (contact thermostat) for underfloor heating.

5.8.3 Connecting a low loss header sensor

The low loss header sensor must either be connected to the X41/RF according to the connection diagram (Fig. 5.15) or to the selected controller (see corresponding operating manual).

5.8.4 Additional relay (grey plug on the PCB) and VR40 - "2 in 7" multifunctional module

Additional relay (grey plug on the PCB)
With the ecoTEC it is possible to actuate one additional component via the additional relay. You can select the installed components via diagnosis point "d.26" at diagnosis level 2 (see Chapter 9.1.2).

VR40 - "2 in 7" multifunctional module
If you wish to connect additional components this can be done using the Vaillant VR40 - "2 in 7" multifunctional module.

Note!
Please observe the separate manual attached to the VR40 - "2 in 7" multifunctional module.

Carry out the installation in accordance with the corresponding operating and installation manual.
To actuate relay 1 at the multifunctional module select diagnosis point "d.27" at diagnosis level 2, and to actuate relay 2 select diagnosis point "d.28" (see Chapter 9.1.2). You can select the following components here:

1 = circulation pump
2 = external pump
3 = charging pump
4 = vapour extraction hood
5 = external solenoid valve
6 = external fault message
7 = not active
8 = remote control eBUS (not active)
9 = legionella pump (not active)

5.8.5 Wiring diagrams

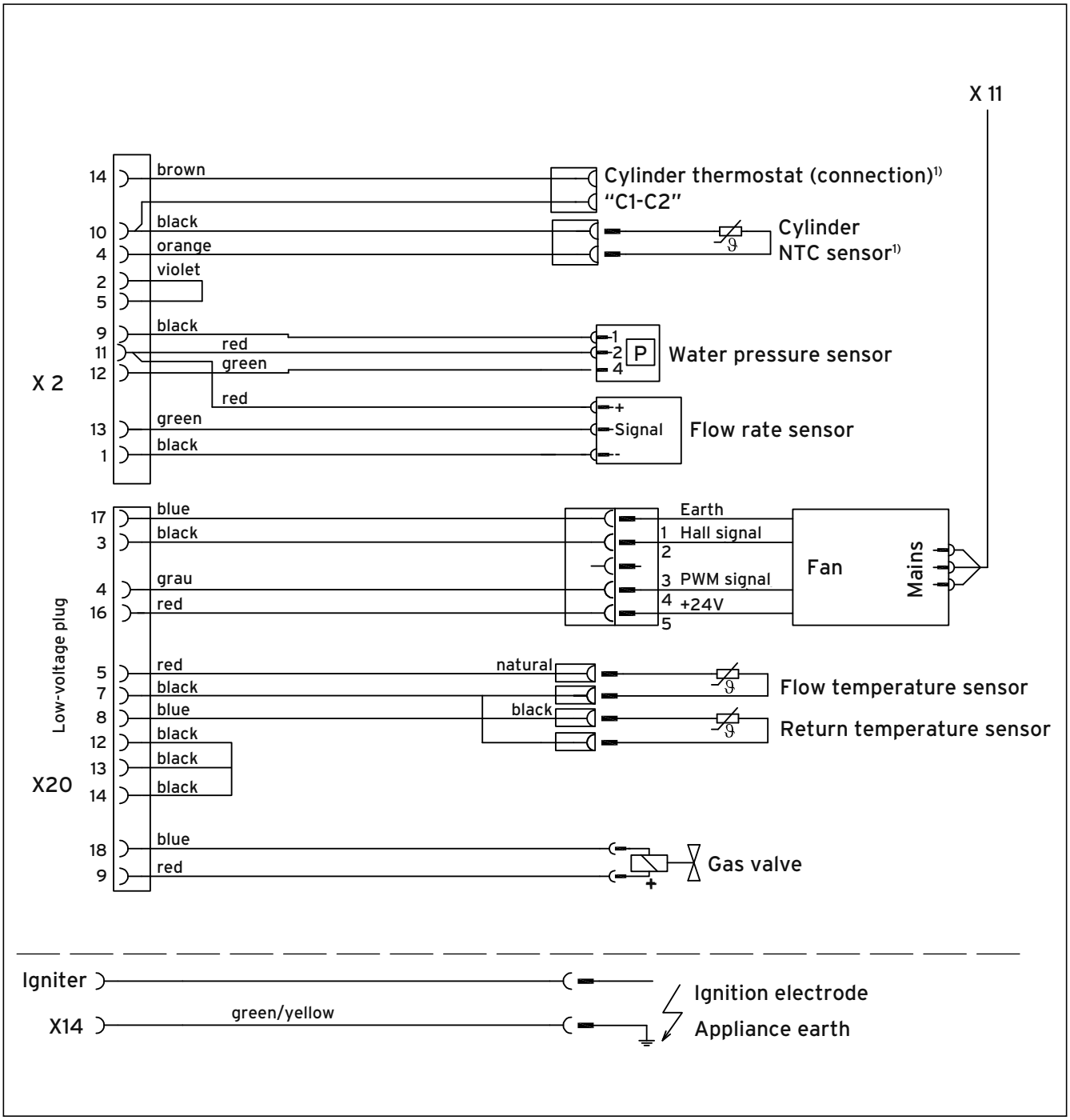

Fig. 5.14 Connection diagram of ecoTEC
(continued on next page)

1) You must not use both the C1/C2 and the cylinder sensor connections!

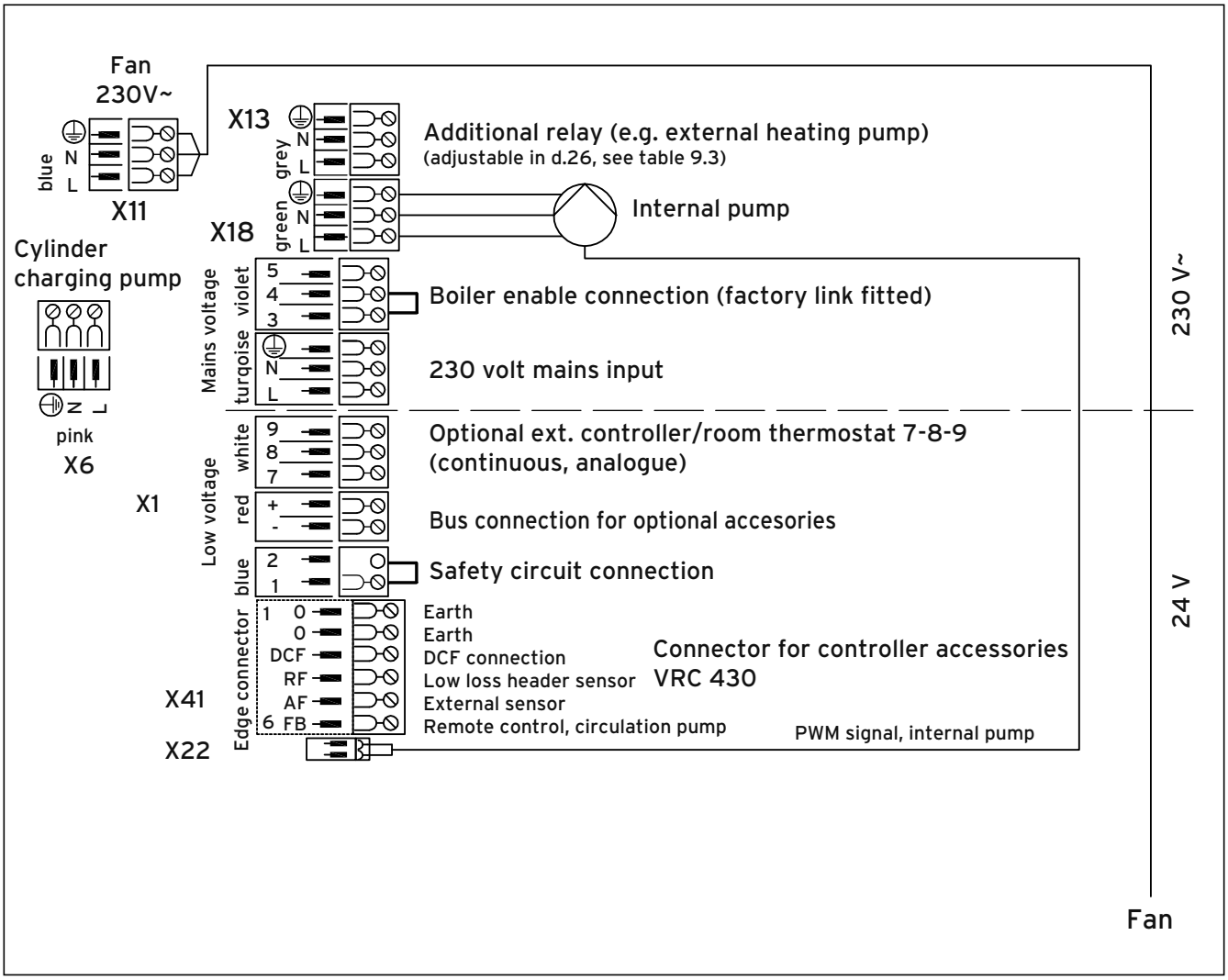

Fig. 5.15 Connection diagram of ecoTEC (continued)

6 Start-up

Caution!
The boiler may only be permanently operated with its casing properly closed!
Otherwise, under unfavourable conditions, it can result in material damage or even injury or death.

Note!
When starting up particularly take the following into consideration:
Before the heating circuit or charging circuit is filled you must open the cap on the automatic air vent which must remain open during subsequent operation.
Use the bleeding program to bleed the heating circuit or charging circuit (see Chapter 9.2).

6.1 Water circulation system

Detailed recommendations concerning the water circuit system can be taken from BS 6798 and BS 5449, Part 1 (for "Small Bore" and "Micro Bore" central heating installations). Lines which do not form part of the usable heating surface should be insulated to prevent heat losses and possible freezing up, especially where the lines run under rooves and ventilated cellar rooms. The drain connections must be easily-accessible, so that the entire system including the boiler and hot water system can be drained. The drain connections should be at least 1/2 " (BSP nominal size) and must be in accordance with BS 2879.
The boiler is suitable for Minibore and Microbore systems. Water lines are to be copper pipes in accordance with BS 2871, Part 1. These must be thoroughly cleaned, especially when connecting a new boiler to an existing system.

Caution!
To prevent deposition and severe damage to the boiler and heating installation the cleaning agent must be applied carefully and subsequently removed from the heating installation by draining it completely. Cleaning agents should not remain in the heating installation longer than 24 hours.

This cleaning process must take place before a new boiler is fitted in accordance with BS 7593.
Recommendations on the use of system cleaning agents can be obtained from Sentinel, Betz Dearborn Ltd. Widnes, Cheshire, WA8 8UD, Tel. 0151 420 9595, or Fernox, Cookson Electronics, Forsyth Road, Sheerwater, Woking, Surrey GU21 5RZ, Tel. 01483 793200.

6.2 Filling the system

6.2.1 Preparation of heating water

Caution!
If anti-freeze inhibitors are to be used it has been found that Sentinel X500 and Fernox Alphi-11 have no known incompatibility issues with our boilers. Vaillant cannot guarantee the compatibility and effectiveness of these products in the rest of the heating installation and accepts no liability or responsibility for damage caused by use on non-recommended anti-freeze inhibitor products.

Risk of damage if the heating water is treated with unsuitable frost or corrosion protection agents.
Frost and corrosion protection agents can cause changes to seals, noise during heating mode and may lead to other consequential damage.
- Do not use any unsuitable frost or corrosion protection agents.

Mixing additives with the heating water can result in material damage. However no incompatibility with Vaillant boilers has been detected with proper use of the following products over a long period.
- When using additives, follow the manufacturer's instructions without exception.

Vaillant accepts no liability for the compatibility of any additive or its effectiveness in the rest of the heating installation.

Additives for cleaning measures (subsequent flushing required)
- Fernox F3
- Sentinel X 300
- Sentinel X 400

Additives intended to remain permanently in the system
- Fernox F1
- Fernox F2
- Sentinel X 100
- Sentinel X 200

Additives for frost protection intended to remain permanently in the system
- Fernox Antifreeze Alphi 11
- Sentinel X 500

- Inform the operator of the necessary measures if you have used these additives.
- Inform the operator about the required measures for frost protection.

Permissible water hardness
- Observe all valid national and technical regulations when conditioning filling and supplementary water.

Provided the national regulations and technical standards do not stipulate more stringent requirements, the following applies:

- You must condition the heating water in the following cases:
  - If the entire filling and supplementary water quantity during the operating life of the system exceeds three times the nominal volume of the heating installation or
  - If the limit values shown in the tables are not observed.

Total heating output	Overall hardness at smallest boiler heating surface[2]		
	20 l/kW	> 20 l/kW < 50 l/kW	> 50 l/kW
kW	mol/m³ (mg/l $CaCO_3$)	mol/m³ (mg/l $CaCO_3$)	mol/m³ (mg/l $CaCO_3$)
< 50	No requirement or < 3[1] < (300)[1]	2 (200)	0.02 (2.0)
> 50 to ≤ 200	2 (200)	1.5 (150)	0.02 (2.0)
>200 to ≤ 600	1.5 (150)	0.02 (2.0)	0.02 (2.0)
> 600	0.02 (2.0)	0.02 (2.0)	0.02 (2.0)

1) on systems with circulation water heaters and for systems with electric heating elements
2) from the specific system volume (nominal capacity in litres/heating output; for multiple boiler systems, the lowest individual heating output should be used). This data only applies up to 3 times the system volume for filling and top-up water. If 3 times the system volume figure is exceeded, the water must be treated in exactly the same way as if the limits quoted in table 6.1 were exceeded (softening, desalination, hardness stabilisation or desludging).

Table 6.1 Guideline values for heating water: water hardness

6.2.2 Filling and bleeding from the heating side

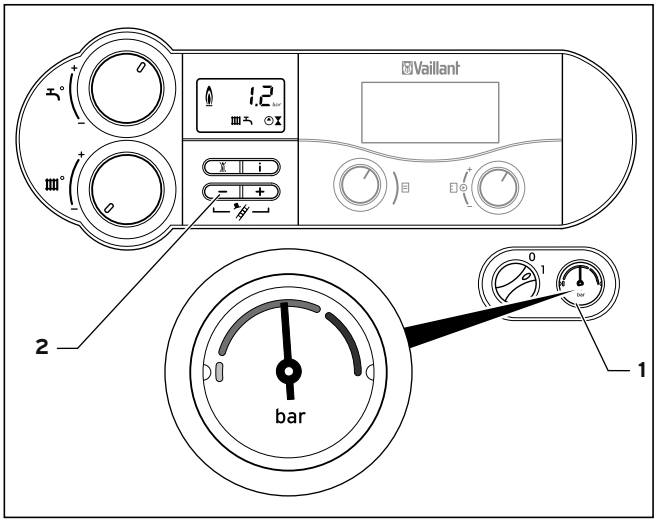

Fig. 6.1 Check the filling pressure of the heating installation

Caution!
Only fill the system via the boilers' built-in combined filling and emptying valve as otherwise problems may occur with bleeding the system.

Note!
The ecoTEC is equipped with a pressure gauge (1) and a digital pressure indicator. You can display the precise filling pressure when the boiler is switched on by pushing the "-" button (2). You can also switch between the continuous display of temperature or pressure by keeping the "-" button pushed for about 5 seconds.

For the heating installation to work properly the indicator on the pressure gauge (**1**) must be in the upper half of the dark grey area when the system is cold (see Fig. 6.1). This corresponds to a filling pressure between 1.0 and 2.0 bar.
If the heating installation serves several floors, the values for the water pressure in the system may need to be higher (to avoid the ingress of air).

- Flush through the heating installation throroughly before actually filling it.

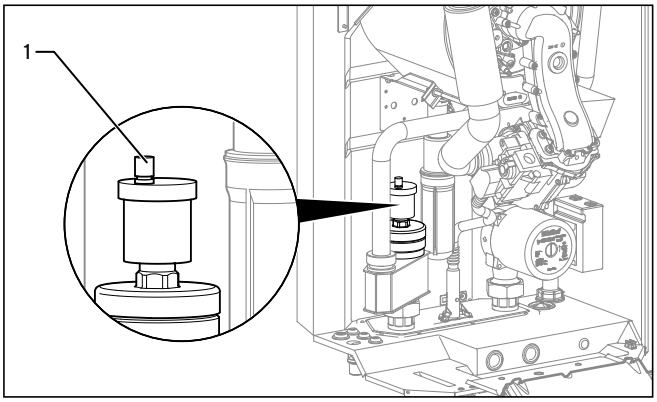

Fig. 6.2 Automatic air vent

- Unfasten the cap on the automatic air vent (**1**) by one or two turns (the appliance is bled automatically while continuously operated via the automatic air vent).
- Open all thermostatic radiator valves in the installation.
- Connect the system's combined filling and emptying valve to a cold water draw-off valve in accordance with the standards.

Note!
To avoid damaging the appliance through operation with insufficient water pressure, the boiler is equipped with a pressure sensor. This sensor records a lack of pressure if the pressure value falls below 0.6 bar and the detected pressure value flashes in the display. If the pressure falls below 0.3 bar the boiler switches off. Fault message F.22 ("water lack")

appears in the display. Fill the system up with water before you start up the boiler again. This message also appears if you switch the boiler on when it is empty and disappears automatically when it is filled.

Caution!
Risk of damage from leaking water!
If the pressure drops frequently the reason for the loss of heating water must be identified and eliminated.

- Open the combined filling and emptying valve and the draw-off valve slowly and add water until the required system pressure is shown on the pressure gauge/display.
- Close the draw-off valve.

Note!
Use the check program P.0 to bleed the heating installation: The boiler does not start up. The internal pump runs intermittently and bleeds the appliance circuit. The pressure is displayed digitally. Ensure that the system pressure does not fall below 0.8 bar when bleeding is in progress. Otherwise the bleeding will not be carried out properly. The bleeding program takes about 6.5 minutes to complete.

- Bleed all the radiators.
- Check the system pressure again.

Caution!
If too much air is still in the system after the bleeding program is finished it must be started again! Once the filling procedure is complete the system pressure should be at least 0.2 bar above the back-pressure from the expansion vessel ($P_{system} \geq P_{ADG}$ + 0.2 bar).

- Check all connections for leaks.

Note!
When the boiler starts operating a maintenance or fault message may occur due to falling system pressure. The message disappears automatically when the boiler is refilled.

6.2.3 Filling the condensate siphon

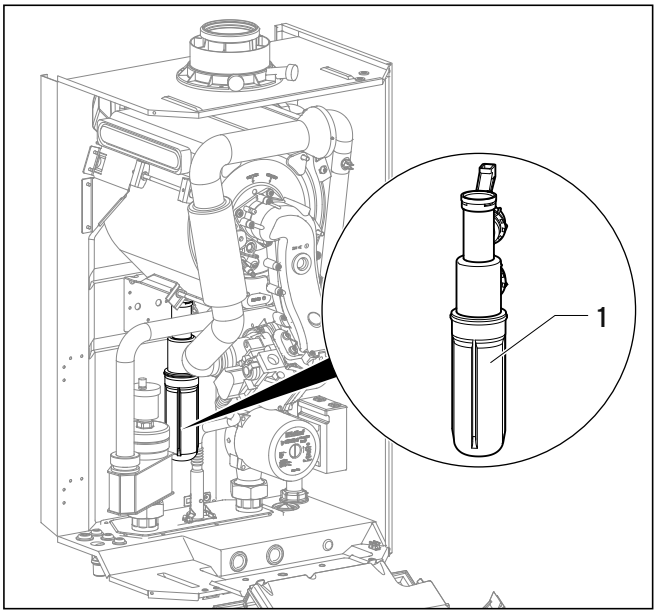

Fig. 6.3 Filling the condensate siphon

Danger!
If the boiler is operated with an empty condensate siphon, there is danger of poisoning through escaping flue gases. Therefore it is mandatory to fill the siphon as described below before start-up.

- Screw off the bottom (**1**) of the condensate siphon.
- Fill the bottom about 3/4 with water.
- Screw the bottom back on the condensate siphon.

6.3 Checking the gas setting

Caution!
Malfunctions or reduction in working life of the boiler!
If the boiler version does not correspond to the local gas family, there will be malfunctions or you have to change components of the boiler ahead of schedule, e. g. do not use a LPG boiler on natural gas.
- **Before starting up the boiler compare the details of the type of gas specified on the identification plate with the type of gas supplied at the installation site.**

If the boiler version corresponds to the local gas family:
- Proceed as described below.

If the boiler version does not correspond to the local gas family:
- Perform the gas conversion in accordance with the gas conversion kit 0020010641.

- Adjust the gas setting as described below (see sections 6.3.1 to 6.3.3).

The combustion of this boiler has been checked, adjusted and preset at the factory for operation on the type of gas defined on the identification plate. No measurement of the combustion is necessary to set up the boiler.
- Do not adjust the multifunctional automatic gas valve.
- Ensure
  - that the boiler has been installed in accordance with these instructions,
  - the integrity of the flue system and the flue seals, as described in the flue installation instructions enclosed with this boiler, and as described below,
  - a visual check is carried out on the boiler combustion circuit and the relevant seals,
  - that any defects have been corrected at this stage.

To further validate the integrity of the flue system and confirm correct operation of the boiler it is possible to conduct flue gas and air measurements on this boiler - for details see section 6.3.1.

Proceed to put the boiler into operation as follows:

- Check the maximum gas flow rate as detailed in section 6.3.2.
- Check the gas inlet working pressure as detailed in section 6.3.3.
- Note that you must re-measure the gas flow rate or the gas inlet working pressure, if changes were required to correct any issues found.

6.3.1 Checking for tightness of the flue gas installation and flue gas recirculation

- Check the integrity off the flue gas installation according to TB 200.
- Should the flue gas installation be longer than 2 m we strongly recommend to check the system for flue gas recirculation as described below.

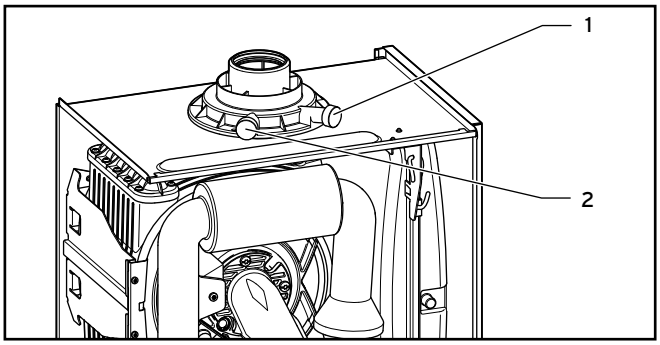

Fig. 6.4 Flue gas and air measure points

Legend:
1 Flue gas measure point
2 Air measure point

- For checking the system for recirculation use the air measure point **(2)**.
- Use the flue gas analyser.
- If you detect any CO or CO2 in the fresh air, search for the flue gas leakage or recirculation.
- Correct the defects.
- Check again as described before, if there is any CO or CO_2 in the fresh air.
- If you cannot correct the defects you must not start up the boiler.

6.3.2 Checking the gas flow rate

The boiler is fitted with a multifunctional automatic gas valve which ensures that the precise air/gas ratio is provided under all operating conditions. The gas flow rate has been set during production and does not require adjustment. With the front casing fitted check the gas flow rate of the boiler as follows:
- Start the boiler by activating the test program P.1 as described in section 9.2.
- In addition, ensure that maximum heat can be dissipated into the heating system by turning up the room thermostat.
- Wait at least 5 minutes until the boiler has reached its operating temperature.
- Ensure that all other gas appliances in the property are turned off.
- Measure the gas flow rate at the gas meter.
- Check that the gas flow rate is as stated in Table 6.2.

Appliance	**ecoTEC VU 466**		
Maximum net heat input in kW	45		
Gas flow rate	nom.	+ 5 %	– 10 %
Natural gas in m3/h	4,76	5,00	4,29
Propane in kg/h	3,50	3,67	3,15

Table 6.2 Gas flow rates

- If the measured gas flow rate lies outside the tolerance limits specified in Table 6.2, do not operate the boiler and inform the Vaillant Service Solutions (0870 6060 777).

If the measured gas flow rate is within the tolerance limits shown in Table 6.2, then proceed as follows:
- Take the boiler out of operation by
  - Pressing the + and i buttons simultaneously and turn down both thermostat control knobs.
- Record the boiler maximum gas flow rate onto the Benchmark gas boiler commissioning checklist.

6.3.3 Checking the gas inlet working pressure

- Ensure that the gas inlet working pressure can be obtained with all other gas appliances in the property working.
- Remove the front casing from the boiler.
- Close the gas isolation valve of the boiler.

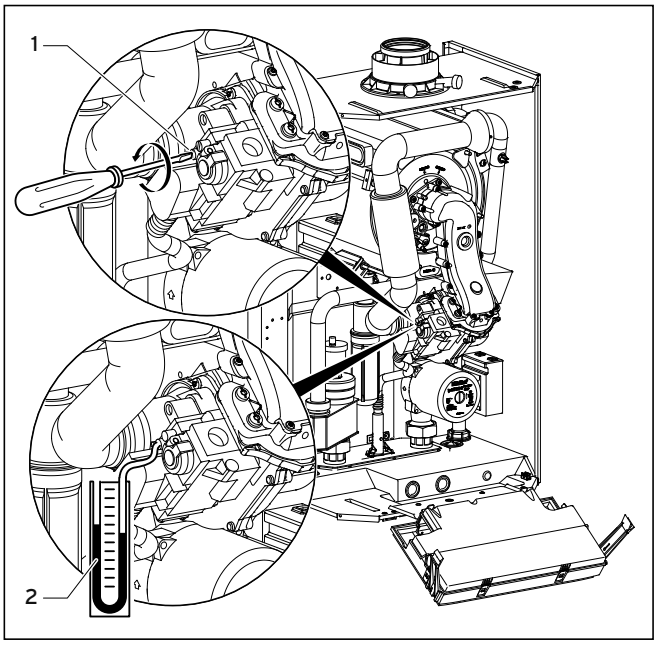

Fig. 6.5 Measuring the gas inlet working pressure

- Loosen the sealing screw marked "in" (**1**) on the gas valve.
- Connect a digital pressure gauge or U-tube manometer (**2**).
- Open the gas isolation valve of the boiler.
- Start the boiler by activating the test program P.1 as described in section 9.2.
- In addition, ensure that maximum heat can be dissipated into the heating system by turning up the room thermostat.
- With the boiler operating at full load check that the gas inlet working pressure at the reference test point (**1**) complies with the requirements of Table 6.3.

Natural gas (G20)		LPG (G31)	
Minimum pressure at reference test point in mbar	**Maximum pressure at reference test point in mbar**	**Minimum pressure at reference test point in mbar**	**Maximum pressure at reference test point in mbar**
17	25	25	45

Table 6.3 Gas inlet working pressure at the reference test point

- Should the pressure recorded at the reference test point in the boiler be lower than indicated (Table 6.3) check if there is any blockage in the pipework or if the pipework is undersized.
- If the supply pressure is out of tolerance contact your Emergency Service Provider.

If the gas inlet working pressure at the reference test point (**1**) is **not** within the permissible range and you cannot correct the failure, notify the gas supply company or the Vaillant Service Solutions team and proceed as follows:

- Take the boiler out of operation by
  - Pressing the + and i buttons simultaneously and turn down both thermostat control knobs.
- Close the gas isolation valve of the boiler.
- Remove the pressure gauge and re-tighten the sealing screw (**1**).
- Turn on gas at the gas isolation valve.
- Make sure that there is no leakage at the sealing screw.
- Turn off gas at the gas isolation valve.
- Put the front casing back on.
- Turn off electrical supply to the boiler.
- You must not start up the boiler.

If the gas inlet working pressure is within the permissible range, proceed as follows:

- Take the boiler out of operation by
  - Pressing the + and i buttons simultaneously and turn down both thermostat control knobs.
- Close the gas isolation valve of the boiler.
- Remove the pressure gauge and re-tighten the sealing screw (**1**).
- Open the gas isolation valve of the boiler.
- Make sure that there is no leakage at the sealing screw.
- Put the front casing back on.
- Reset boiler controls for normal operation.
- Record the appliance gas inlet working pressure (mbar) in the Benchmark gas boiler commissioning checklist.

6.4 Checking the appliance function

If the installation is complete and the gas setting has been checked, perform a function check before starting up the boiler and handing it over to the operator.

- Commission the boiler in accordance with the instructions in the relevant operating manual.
- Check the tightness of the gas supply line, flue gas installation, heating installation and hot water pipes.
- Check the air/flue gas duct for proper installation.
- Make absolutely sure that the front casing is properly closed.
- Check the function of the heating (see Chapter 6.4.1) and hot water generation (see Chapter 6.4.2)
- Hand over the boiler to the operator.

The Vaillant ecoTEC displays status codes to indicate the operating condition of the boiler. You can perform a function check based on these status codes by pressing the "i" button.

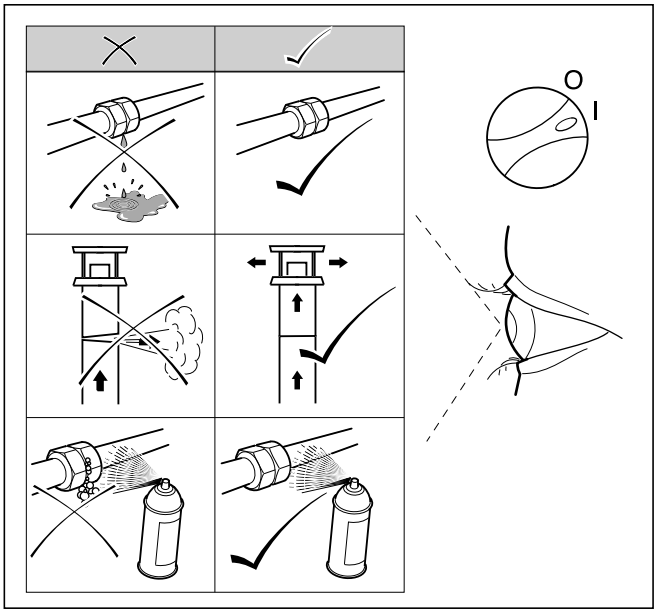

Fig. 6.6 Tightness check

6.4.1 Heating

- Switch on the boiler.
- Make sure that a heat requirement is applied.
- Push "**i**" to activate the status indicator.

As soon as there is a heat requirement, the boiler goes through the status displays "**S. 1**" to "**S. 3**", until the boiler is running properly in normal operation and "**S. 4**" appears in the display.

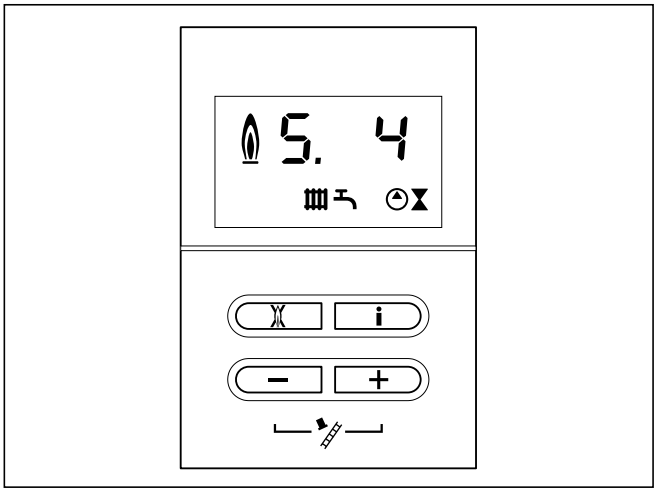

Fig. 6.7 Display during heating mode

6.4.2 Cylinder charging

- Switch on the boiler and the connected hot water cylinder.
- Make sure that the cylinder thermostat is requesting heat.
- Push the "**i**" button.

If the cylinder is correctly charged the boiler runs through the status displays "**S. 20**" to "**S. 23**", until the boiler is running properly in normal operation and "**S. 24**" appears in the display.

Note!
If you connect your controller to a dual-cable eBUS line, specify the highest possible hot water temperature using the corresponding rotary knob. Specify the set target temperature for your cylinder at the controller.

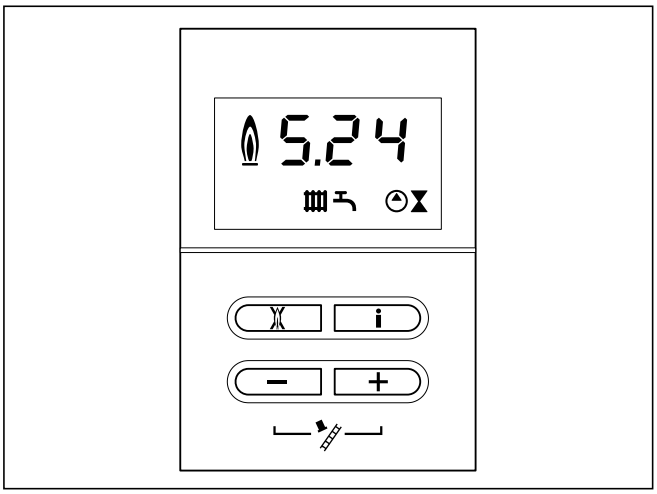

Fig. 6.8 Display in cylinder charging mode

6.5 Handing over the boiler to the operator

Note!
Once the installation is complete, please affix the enclosed sticker (Item No. 835 593) containing the language used by the operator to the boiler front.

The operator must be instructed in handling and functions of the ecoTEC boiler.

- Hand over any instruction manuals intended for the operator, as well as the appliance documents for safe keeping.
- Read through the operating manual with the operator and answer any questions.
- Draw special attention to the safety instructions which the operator must follow.
- Make the operator aware of the need for regular inspection and maintenance of the system.
- Make the operator aware of the need to keep the manuals in a handy location near the ecoTEC, but not in or on the boiler.
- Instruct the operator about measures taken to ensure the supply of combustion air and flue gas guiding. Point out that these measures, particularly, must not be altered.
- Explain to the operator how to check the water level/ filling pressure of the system and show the operator how to refill and bleed the heating installation when the need arises.

- Show the operator the correct (economical) temperature, controller and thermostat valve settings.

Caution!
The boiler may only be permanently operated with its casing properly closed! Otherwise, under unfavourable conditions, it can result in material damage or even injury or death.

7 Adapting the boiler to the heating installation

The ecoTEC boilers are equipped with a Digital Information and Analysis system (DIA system).

7.1 Selection and setting of parameters

In the diagnosis mode, you can change various parameters to match the boiler to the heating installation.

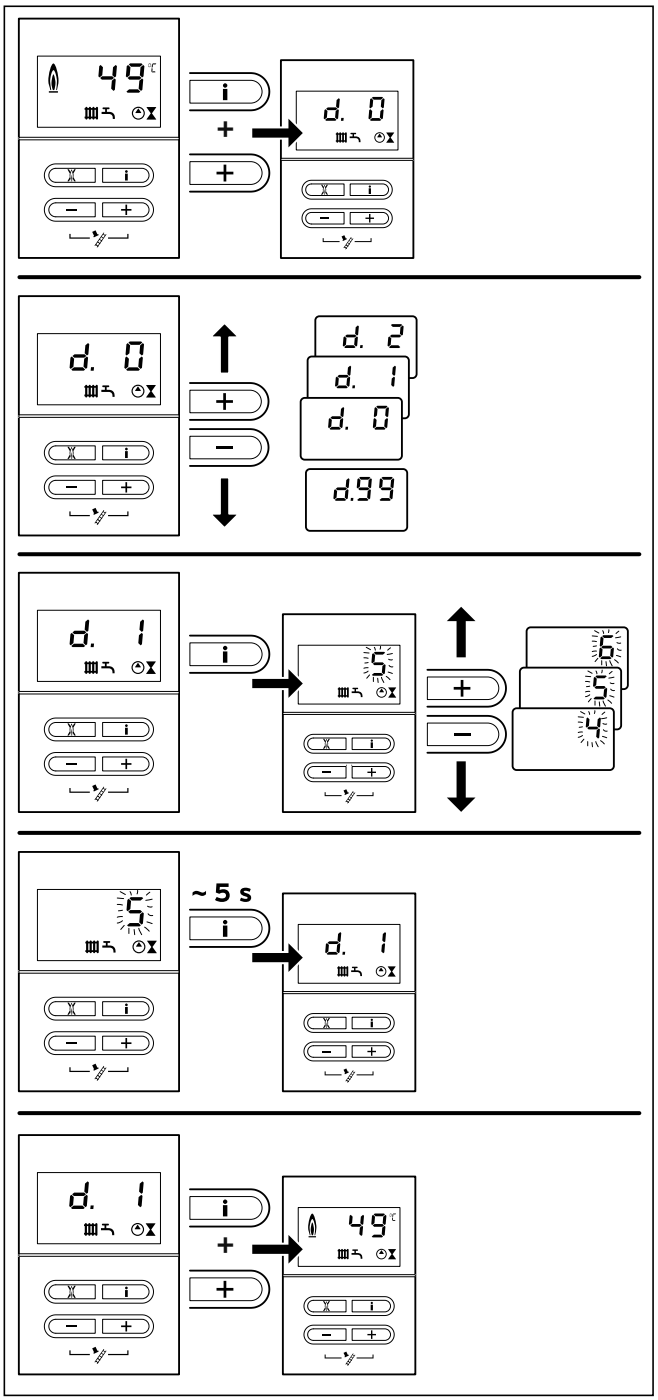

Fig. 7.1. Setting the parameters

Table 7.1 shows only those diagnosis points where modifications are possible. All the other diagnosis points are only required for diagnostics and fault repair (see Chapter 9).

Using the following description you can select the relevant parameters:

- Push the "i" and "+" buttons simultaneously.

The display shows "d. 0".

- Scroll to the desired diagnosis code with the "+" or "–" buttons.
- Push the "i" button.

The display shows the respective diagnosis information.

- If necessary, use the "+" or "–" keys to change the value (display flashes).
- Save the new value by holding the "**i**" button pressed for about 5 seconds until the display stops flashing.

You can finish the diagnosis mode as follows:

- Push the "i" and "+" buttons simultaneously or avoid pressing any buttons for about 4 minutes.

The current heating flow temperature, or installation pressure (if option is selected), reappears in the display.

7.2 Overview of adjustable system parameters

The following parameters can be set to match the boiler to the heating installation and to suit the customers requirements:

Note!
You can enter your settings in the last column after setting the appliance-specific parameters.

Note!
The diagnosis points d.14, d.17, d.18, d.20, d.26, d.27, d.28, d.50, d.51, d.70, d.71, d.72, d.75, d.77, d.78, d.84, d.93 and d.96 can be found at diagnosis level 2, see Chapter 9.1.2.

Display	Meaning	Adjustable parameters	Factory setting	Boiler-specific setting
d. 0	Heating partial load	12.5 - 45 kW	35 kW	
d. 1	Overrun time of internal pump for heating mode	2 - 60 min	5 mins	
d. 2	Maximum burner anti-cycling time heating at 20°C flow temperature	2 - 60 min	20 min	
d.14	Pump speed target value	Target value of internal pump in %: 0 = auto, 1 = 53, 2 = 60, 3 = 70, 4 = 85, 5 = 100	5	
d.17	Heating flow/return regulation changeover	0 = flow, 1 = return	0	do not adjust
d.18	Specification of the pump operating mode	0 = overrun, 1 = run on, 2 = winter, 3 = intermittent	3	
d.20	Maximum setting for cylinder target value	40 to 70 °C	65 °C	
d.26	Additional relay control ecoTEC	1 = circulation pump 2 = ext. Pump 3 = charging pump 4 = vapour extraction hood 5 = ext. solenoid valve 6 = ext. fault message 7 = not active 8 = remote control, eBUS (not yet supported) 9 = legionella pump (not active)	2	
d.27	Switch of relay 1 on the multifunctional module 2 in 7	1 = circulation pump 2 = ext. Pump 3 = charging pump 4 = vapour extraction hood 5 = ext. solenoid valve 6 = ext. fault message 7 = not active 8 = remote control, eBUS (not yet supported) 9 = legionella pump (not active)	1	
d.28	Switch of relay 2 on the multifunctional module 2 in 7	1 = circulation pump 2 = ext. Pump 3 = charging pump 4 = vapour extraction hood 5 = ext. solenoid valve 6 = ext. fault message 7 = not active 8 = remote control, eBUS (not yet supported) 9 = legionella pump (not active)	2	
d.50	Offset for minimum speed	in rpm/10, adjustment range: 0 to 300	30	
d.51	Offset for maximum speed	in rpm/10, adjustment range: -99 to 0	-45	
d.70	not relevant	not relevant		
d.71	Target value maximum heating flow temperature	40 to 85 °C	75 °C	
d.72	Pump overrun time after cylinder charging	0 - 600 s	80 s	
d.75	maximum charging time for hot water cylinder without independent control system	20 - 90 min	45 mins	
d.77	Limitation of cylinder charging output in kW	such as heating partial load	35 kW	
d.78	Limitation of cylinder charging temperature in °C	55 - 85 °C	80 °C	
d.84	Maintenance indicator: Number of hours until the next maintenance	0 to 3000 h and "-" (300 corresponds to 3000 h, "-" = deactivated)	„-“	
d.93	DSN appliance variant setting	Setting range: 0 to 99	46 = VU 466	
d.96	Factory setting	1 = Resetting adjustable parameters to factory setting		
d.97	Activation of the 2nd diagnosis level	Code: 17 for level 2		

Table 7.1 Adjustable parameters, levels 1 and 2

7.2.1 Setting the heating partial load

The output of the boilers is set at 35 kW in the factory. You can specify a value that corresponds to the kW output of the boiler under diagnosis point "d. 0".

7.2.2 Setting of pump overrun and pump operating mode

The pump overrun time for the heating operation is set at the factory to a value of 5 minutes. It can be adjusted through a range of 2 – 60 minutes under diagnosis point "d. 1". Under diagnosis point "d.18", you can set the overrun behaviour of the pump to a different mode.
Overrun: Once the heating requirement has ended, the pump runs on for the time specified under "d. 1".
Run on: The pump is switched on if the rotary knob for setting the heating flow temperature is not at the left-hand stop and the heat requirement is enabled by an external controller.
Intermittent: This pump operating mode is useful for removing residual heat after charging when the heat demand is extremely low and large temperature spreads exist between the charging and heating mode target values. This avoids underheating of the living spaces. In the event of a heat demand the pump is switched on every 25 minutes for 5 minutes once the overrun time has elapsed

7.2.3 Setting of maximum flow temperature

The maximum flow temperature for the heating is set at the factory to 75 °C. Under diagnosis point "d.71" it can be set to between 40 and 85 °C.

7.2.4 Setting of burner anti-cycling time

To prevent frequent switching on and off of the burner (energy loss), an electronic restart lockout is activated for a specific period each time the burner is switched off. The burner anti-cycling time can be modified to suit the conditions of the heating installation.
The burner anti-cycling time is only activated for the heating operation.
Hot water operation during a burner anti-cycling time does not affect the timer. The maximum burner anti-cycling time can be set to a value of between 2 and 60 min under diagnosis point d.2 (factory setting: 20 min). The individual effective anti-cycling time is calculated from the current target flow temperature and the set maximum burner anti-cycling time.
The timer can be reset or cancelled by pressing the fault clearance key and also by activating summer mode for a short time (by briefly turning the nominal flow potentiometer to the left-hand stop then back to the starting position). The remaining burner anti-cycling time following a regular shutdown in heating mode can be called up under diagnosis point "d.67".

T_{Flow}(target) [°C]	Set maximum burner anti-cycling time [min]												
	1	5	10	15	20	25	30	35	40	45	50	55	60
20	2.0	5,0	10,0	15,0	20,0	25,0	30,0	35,0	40,0	45,0	50,0	55,0	60,0
25	2.0	4,5	9,2	14,0	18,5	23,0	27,5	32,0	36,5	41,0	45,0	50,0	54,5
30	2.0	4,0	8,5	12,5	16,5	20,5	25,0	29,0	33,0	37,0	41,0	45,0	49,5
35	2.0	4,0	7,5	11,0	15,0	18,5	22,0	25,5	29,5	33,0	36,5	40,5	44,0
40	2.0	3,5	6,5	10,0	13,0	16,5	19,5	22,5	26,0	29,0	32,0	35,5	38,5
45	2.0	3.0	6.0	8,5	11,5	14,0	17,0	19,5	22,5	25,0	27,5	30,5	33,0
50	2.0	3.0	5,0	7,5	9,5	12,0	14,0	16,5	18,5	21,0	23,5	25,5	28,0
55	2.0	2.5	4,5	6.0	8,0	10,0	11,5	13,5	15,0	17,0	19,0	20,5	22,5
60	2.0	2.0	3,5	5,0	6.0	7,5	9,0	10.5	11,5	13,0	14,5	15,5	17,0
65	2.0	1,5	2.5	3,5	4,5	5,5	6,5	7,0	8,0	9,0	10,0	11,0	11,5
70	2.0	1,5	2.0	2.5	2.5	3.0	3,5	4,0	4,5	5,0	5,5	6.0	6,5
75	2.0	1,0	1,0	1,0	1,0	1,0	1,0	1,0	1,0	1,0	1,0	1,0	1,0

Table 7.2 Effective burner anti-cycling times

The effective burner anti-cycling times for each case depending on the set target flow temperature and the maximum specified burner anti-cycling time can be taken from Table 7.2.

7.2.5 Determination of maintenance interval/maintenance display

The ecoTEC electronics incorporate a feature that enables you to determine the maintenance intervals for the boiler. This function serves to provide a signal after a specific, adjustable number of burner operating hours that the boiler needs to be maintained.
The service signal SEr and the current flow temperature are shown alternately in the display of the ecoTEC once the specified number of burner operating hours has elapsed. The "maintenance" message appears in the display of the eBUS controller (accessories).

Heat demand	Number of persons	Burner operating hours to the next inspection/maintenance (dependent upon the system type)
5 kW	1 - 2 2 - 3	1.650 h 1.650 h
10 kW	1 - 2 2 - 3	2.300 h 2.300 h
15 kW	2 - 3 3 - 4	1.800 h 1.800 h
20 kW	3 - 4 4 - 5	2.500 h 2.500 h
25 kW	3 - 4 4 - 6	2.600 h 2.600 h
> 27 kW	3 - 4 4 - 6	3.000 h 3.000 h

Table 7.3 Guide values for operating hours

The number of operating hours up to the next maintenance can be set under the diagnosis point "d.84". Guide values can be taken from table 7.3; these values comply with an approximate operating time of one year for the appliance.
The operating hours can be set in steps of ten from 0 to 3000 h.
If the symbol "–" is entered at diagnosis point "d.84" instead of a numerical value, the "maintenance display" function is deactivated.

Note!
After the set number of hours has elapsed, the service interval must be entered in the diagnosis mode again.

8 Inspection and maintenance

8.1 Inspection and maintenance intervals

Danger!
Risk of injury and risk of damage to property due to neglected inspection and maintenance!
Neglected inspection and maintenance works or not observing the stated inspection and maintenance intervals can interfere with the operational safety of the boiler and can result in damage to property and to persons.
- **Point out to the operator that he must observe the demanded inspection and maintenance intervals as a minimum.**
- **Carry out proper regular inspections once a year.**
- **Carry out regular maintenance as dictated by findings during the inspection process.**
  The frequency of maintenance must not be longer than every 5 years.

Danger!
Danger of life and limb due to improper inspection/maintenance!
Inspections/Maintenance work carried out improperly can result in leakages and explosion.
- **The boiler may only be inspected/maintained by a competent person.**

All service work must be carried out by a competent person in accordance with the Gas safety, installation and use regulations. In the UK this is considered to be a person approved at the time by the Health and Safety Executive.

In addition BS 6798: 2009 "Specification for installation and maintenance of gas-fired boilers of rated input not exceeding 70 kW net" advises that:
- The person carrying out a combustion measurement must be assessed as competent in the use of a flue gas analyser and the interpretation of the results.
- The flue gas analyser used must be one meeting the requirements of BS7927 or BS-EN50379-3 and be calibrated in accordance with the analyser manufacturers' requirements.
- Competence can be demonstrated by satisfactory completion of the relevant ACS standard assessment, which covers the use of electronic portable flue gas analysers' in accordance with BS 7967, parts 1 to 4.
- The flue gas analyser is set to the correct fuel setting.

We recommend the conclusion of an inspection and maintenance contract with an approved company or installer. The inspection serves to determine the actual condition of the respective boiler and compare it with the specified condition. This is done by measuring, checking and observing. Maintenance is required in order to eliminate any deviations of the actual condition from the specified condition.

This normally is done by cleaning, adjustment and, if neces-sary, replacing individual components that are subject to wear.

You must carry out an annual inspection of the Vaillant ecoTEC.
It is possible to perform a quick, accurate inspection without removing components by requesting data from the DIA system, carrying out the simple visual checks indicated in Table 8.2 and performing a flue gas measurement.
The maintenance intervals (at least once every 5 years) and their scope are determined by the heating engineer based on the condition of the boiler found during the inspection.
All inspection and maintenance work should be performed in the order specified in Table 8.2.

Danger!
Possible poisoning and burning by escaping hot flue gases!
It is possible that hot flue gases escape and could result in poisoning or burning, if the boiler is operated
- **without a completely installed air/flue gas duct**
- **with an opened air/flue gas duct**
- **with internal leakages and an opened front casing.**
- **Operate the boiler**
  - **for commissioning**
  - **for testing purposes**
  - **in continuous mode**
  only with closed front casing and completely mounted and closed air/flue gas duct.

8.1.1 General inspection and maintenance instructions

The original components of the product were also certified as part of the CE declaration of conformity. If you do not use certified Vaillant original spare parts for maintenance or repair work, this voids the CE conformity of the product. We therefore strongly recommend that you fit Vaillant genuine spare parts. You can find information about the available Vaillant original spare parts on the back page of these instructions, below the contact address.
➤ If you require spare parts for maintenance or repair work, use only Vaillant genuine spare parts.

During any inspection and maintenance or after change of parts of the combustion circuit, the following must be checked:

- The appliance has been installed in accordance with the relevant installation instructions.
- The integrity of the flue gas installation and flue seals is in accordance with the relevant flue installation instructions enclosed.

- Visual, the integrity of the boiler combustion circuit and relevant seals.
- The gas inlet working pressure at maximum rate as described in section 6.3.3.
- The gas flow rates as described in section 6.3.2.
- Correctness of electrical, water and gas connections.
- Correctness of the water pressure.
- The condition of the whole system, in particular the condition of radiator valves, evidence of leakage from the heating system and dripping taps.

• Correct any faults before proceeding.

8.1.2 Safety instructions

Danger!
Danger of life and limb by electric shock!
The supply terminals of the boiler are under mains voltage even if the boiler main switch is off.
- **Don't touch the supply terminals.**
- **Protect the electronic box from any water or spray.**
- **Before working on the boiler, turn off the power and secure against restart.**

Note
If it is necessary to keep the electricity to the boiler switched on for certain inspection and maintenance, this is indicated in the description of the maintenance task.

Always perform the following steps **prior** to inspection or maintenance work:
- Switch off the main switch.
- Disconnect the boiler from the power mains by
  - disconnecting the mains plug or
  - de-energising the boiler via an isolating device with a contact opening of at least 3 mm (e. g. fuses or power switches).
- Further check for electrical isolation of the appliance by use of a test meter.
- Close the gas isolation valve.
- Close the service valves in the heating flow and return.
- Remove the front casing from the boiler.
- When removing any water carrying components ensure that water is kept away from all electrical components.

Always perform the following steps after performing any inspection or maintenance work:
- Always use new seals and O-rings when parts are replaced.
- Open the service valves in the heating flow and return.
- Reconnect the boiler to the power mains.
- Switch the main switch on.
- Fill the heating circuit of the boiler to a pressure of between 1.0 and 2.0 bar if required.
- Bleeding the heating installation (see section 6.2, Filling the system).
- Open the gas isolation valve.
- Check the boiler for gas and water leaks.
- If necessary, refill and re-bleed the heating installation.
- Replace the front casing to the boiler.
- Carry out a functional check of the boiler (see section 6.4).
- Always check earth continuity, polarity and resistance to earth with a multimeter after any service work and after replacing any electrical component.

8.1.3 Checking the CO_2 concentration

Note
Checking/adjustment of the CO_2 concentration is required in the following instances:
- replacement of gas valve,
- conversion to or from Natural Gas/LPG
- or if an incorrect combustion is suspected.

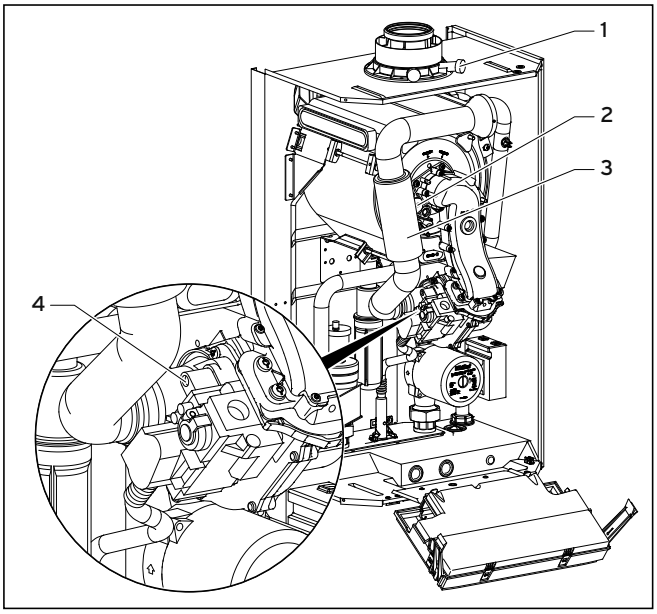

Fig. 8.1 Measuring the CO_2 concentration, specifying the air ratio (gas setting)

Legend:
1 Flue gas analysis point
2 Screw
3 Air intake pipe
4 Main throttle

Note
The boiler is fitted with a flue gas analysis point (1). A suitable flue gas analyser can be connected to this point to establish the combustion performance of the boiler.

- Remove the front casing.
- Start the testing program P.1.
- Wait at least 5 minutes until the boiler reaches its operating temperature.
- Measure the CO_2 concentration at the flue gas analysis point (**1**). Compare the measured value with the corresponding value in Table 8.1.
- If all these points are as required, proceed as described in section 8.1.5.
- If one of the flue gas values is greater than the acceptable values in Table 8.1, then proceed as described in the following section 8.1.4.

8.1.4 Adjusting the CO_2 concentration (or the air ratio)

Danger!
Increased risk of poisoning due to incorrect settings!
Incorrect setting may increase the risk of poisoning.
- **If one of the flue gas values is greater than the acceptable values in Table 8.1 then check**
  - **the integrity of the complete flue gas installation**
  - **the integrity of the combustion circuit seals**
  - **the gas inlet working pressure**
  - **the gas flow rate.**

If the flue gas value needs to be adjusted,
- unfasten the screw (Fig. 8.1, **2**) and
- fold the air intake pipe (Fig. 8.1, **3**) forwards through 90°. Do not remove the air intake pipe.
- Specify the required flue gas value if necessary (value with front casing of boiler removed, see Table 8.1) by turning the screw of the main throttle (Fig. 8.1, **4**)

Note
Use a 4 mm hexagon socket spanner to turn the screw.

- Turn to the left: higher CO_2 concentration,
- Turn to the right: lower CO_2 concentration.

Note
Natural gas: Only perform the adjustment in increments of 1/8 turn and wait approximately 1 minute after each adjustment until the value stabilises.
Liquid gas: Only perform the adjustment in very small increments (approximately 1/16 turns), and wait approximately 1 minute after each adjustment until the value stabilises.

- After performing the adjustments, fold the air intake pipe back up.
- Check the CO_2 concentration once again.
- If necessary, repeat the setting process.
- Push the „i“ button to deactivate the full load mode. The full load mode is also deactivated if no button is pushed for 15 minutes.
- The adjusting screw shall be sealed after the adjustment.
- Re-secure the air intake pipe with the screw (**2**).
- Put the front casing back on.

Settings	Natural gas (H) Tolerance	Propane Tolerance	Unit
CO_2 after 5 minutes full load mode with boiler front casing closed	9.0 ± 1.0	10.0 ± 0.5	Vol.-%
CO_2 after 5 minutes full load mode with boiler front casing removed	8.8 ± 1.0	9.8 ± 0.5	Vol.-%
Set for Wobbe index W_S	15	22.5	kWh/m3
CO value with full load	< 250	< 250	ppm
CO/CO_2	< 0,0031	< 0,0026	

Table 8.1 Factory gas setting

Danger!
Risk to life due to poisoning!
CO is an extremely toxic gas. Risk to life due to excessive CO concentrations.
- **If you are not able to adjust the boiler correctly and the flue gas values remain higher than allowed in Table 8.1, call the Vaillant Service Solutions.**
- **Do not start up the boiler!**

8.1.5 Inspection and maintenance work steps

No.	Activity	Column 1 Inspection must be carried out each year	Column 2 Maintenance must be carried out at regular intervals – but no longer than 5 years
1	Check the air flue gas installation for leaks and for proper fixation and ensure it is not blocked or damaged and is fitted correctly, complying with the relevant installation instructions.	x	x
2	Carry out a general inspection of the boiler for dirt and dust and clean as necessary.	x	x
3	Visually inspect the complete heat engine for its general condition and for signs of corrosion, sooting or other forms of damage. If damage is evident proceed to column 2.	x	x
4	Measure the gas flow rate during operation with maximum load (section 6.3.2). If the gas flow rate complies to the Table 6.1 continue with column 1, if not proceed to column 2.	x	x
5	Check the gas inlet working pressure (section 6.3.3) operation with maximum load. If the gas inlet working pressure complies to the Table 6.2 continue with column 1, if not proceed to column 2.	x	x
6	Check combustion by measuring CO, CO_2 and CO/CO_2. If the values are outside the tolerances of Table 8.1 proceed to maintenance column 2. You must not proceed with the maintenance if a new burner door seal kit is not available.	x	
7	Isolate the boiler from the power mains. Check whether the electrical plug connections and the other electrical connections are fitted tightly and correct them if necessary.	x	x
8	Close the gas isolation valve and the service valves.		x
9	Dump the pressure in the boiler on the water side (observe pressure gauge) and check the charge pressure of the expansion vessel. Top up if necessary.		x
10	Remove the compact thermal module.		x
11	Check the integrity of all combustion circuit seals, especially the burner door seal. If there are any damages repair them before proceeding.		x
12	Clean the heat exchanger.		x
13	Check whether the burner is dirty and clean it if necessary.		x
14	Check the condensate siphon in the boiler, clean and fill if necessary.	x	x
15	Check the condensate ducts in the boiler and clean if necessary.	x	x
16	Clean the air separation system.		x
17	Install the compact thermal module. **Caution: Use new seals and nuts!**		x
18	Open the service valves and fill up the boiler/appliance to approximately 1.0 - 2.0 bar (depending on the static height of the system). Start the bleeding program P.0.		x
19	Open the gas isolation valve, reconnect the boiler with the power mains and switch on the boiler.	x	x
20	Perform a test operation of the boiler and heating installation, including water heating and bleed again if necessary.	x	x
21	Check visually the ignition and burner performance.	x	x
22	Check the boiler for leaks of any kind (gas, flue gas, water, condensate) and rectify as necessary.	x	x
23	If you had problems with the CO, CO_2, CO/CO_2-values in Step 6 before the maintenance, check them again now (see Table 8.1). If they are outside of the tolerances of Table 8.1 make an adjustment, see section 8.1.4.		x
24	Complete the gas commission checklist (benchmark book).	x	x

Table 8.2 Inspection and maintenance steps

8.2 Filling/draining the boiler and heating installation

8.2.1 Filling the boiler and the heating installation

A description of how to fill the boiler and heating installation is provided in Chapter 6.2.

8.2.2 Draining of the boiler

- Close the service valves of the boiler.
- Open the drain valves on the service valves.
- Open the automatic air vent on the air separator to allow the boiler to drain completely.

8.2.3 Draining the entire system

- Attach a hose to the draining device on the system.
- Bring the open end of the hose to an appropriate drain point.
- Make sure that the service valves of the boiler are open.
- Open the drain valve.
- Open the bleeding valves of the radiators.
  Start from the highest radiator and then work from the top to the bottom.
- Once the water has drained off, close the bleeding valves of the radiators and the drain valve.

8.3 Maintenance of the compact thermal module

8.3.1 Dismounting the compact thermal module

The compact thermal module consists of the speed controlled fan, the gas/air combination valve, the gas feed (mixture pipe) to the fan premix burner and the premix burner itself. These four individual parts form the compact thermal module component.

Danger!
Danger of burning or scalding!
There is danger of being burned or scalded at the compact thermal module and at all water-carrying components. Only carry out work on these components once they have cooled down.

To dismount the compact thermal module proceed as follows:

- Turn off the boiler by the main switch.
- Isolate the boiler from the electrical mains.
- Cut off the gas supply to the boiler.
- Remove the front casing of the boiler.
- Swing off the electronic box.

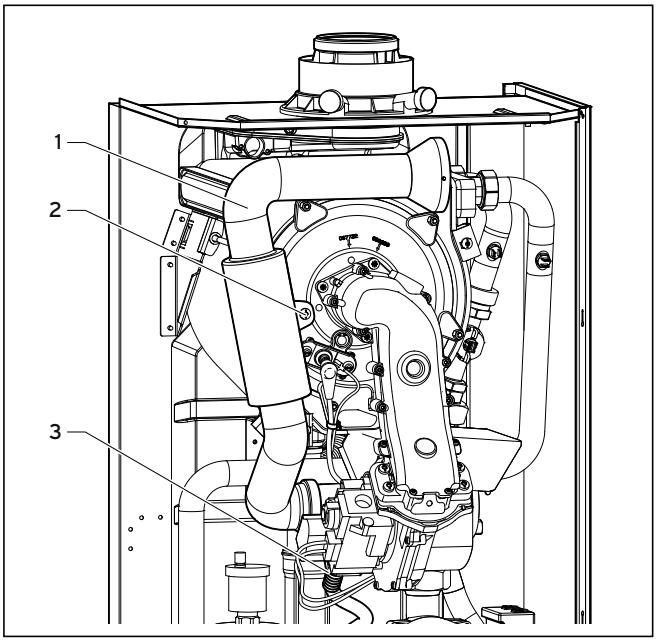

Fig. 8.2 Removing air intake pipe

- Remove the screw (**2**) and remove the air intake pipe (**1**) from the intake stub.
- Disconnect the gas supply line (**3**) at the gas valve. To prevent the corrugated gas pipe from twisting when loosening the cap nut, hold up the pipe at the spanner flat.

Caution!
Damage to gas supply!
Under no circumstance may the compact thermal module dangle on the flexible corrugated gas pipe.

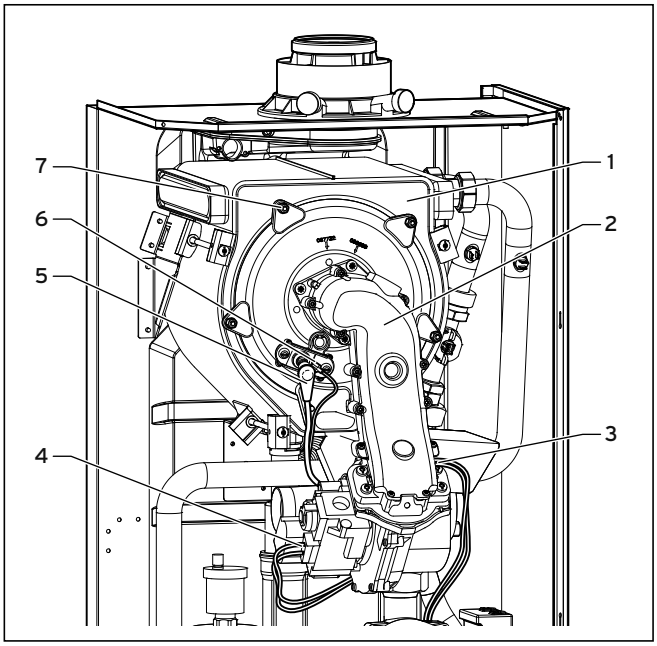

Fig. 8.3 Dismounting compact thermal module

- Remove the two plugs for the ignition (**5**) and ground connections (**6**) from the ignition electrode.
- Remove the plugs (**3**) at the fan motor and the cable (**4**) at the gas valve.
- Undo the five nuts (**7**).
- Pull off the entire compact thermal module (**2**) from the heat exchanger (**1**).
- After dismounting check the burner and heat exchanger for damage and soiling – clean the components if necessary as described below.
- Check the insulating layer at the burner door. If signs of damage are apparent it must be renewed (Item No. 210734).

8.3.2 Cleaning the heat exchanger

Caution!
Danger of short-circuiting and irrepairable damage to the PCB and fan!
Protect the downfolded electronic box and also the fan against splash water.

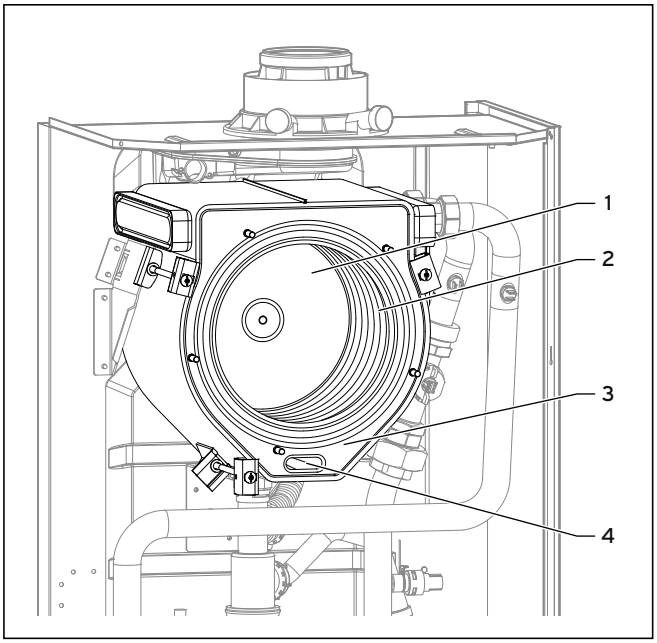

Fig. 8.4 Cleaning the heat exchanger

- Dismount the compact thermal module as described under 8.3.1.
- Clean the heating coil (**2**) of the heat exchanger (**3**) using commercially-available essence of vinegar. Flush with water. The water flows out of the heat exchanger through the condensate siphon. You can also clean the condensate trap via the opening (**4**).
- Allow the cleaning agent to take effect for approximately 20 minutes then rinse off the loose dirt with a powerful water jet. Avoid pointing the water jet directly at the insulating mat (**1**) at the rear of the heat exchanger.
  You can also use a plastic brush to carry out the cleaning.

8.3.3 Checking the burner

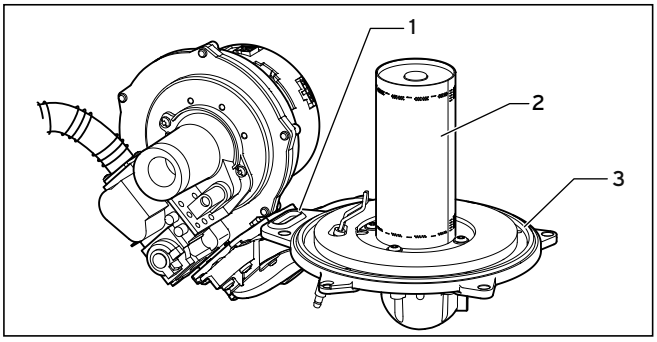

Fig. 8.5 Checking the burner

The burner (**2**) is maintenance-free and needs no cleaning.

- Check the surface of the burner for damage, replace the burner if necessary.
- After checking/repairing the burner install the compact thermal module as described in Chapter 8.3.4.

8.3.4 Installing the compact thermal module

- Renew the seals (**1**) and (**3**) in the burner door (see Fig. 8.5).

Danger!
Danger of combustion and damage due to escaping hot flue gases!
Both seals (1) and (2) and the self-locking nuts on the burner door must be replaced each time the burner door is opened (e.g. during maintenance and service work). If the insulation layer on the burner door shows signs of damage it must also be renewed (Item No. 210734).

- Insert the compact thermal module (**2**, Fig. 8.3) into the heat exchanger (**1**, Fig. 8.3).
- Tighten the five nuts (**7**, Fig. 8.3) including the retainer for the air intake pipe crosswise until the burner door is uniformly seated on the contact surfaces.
- Plug on the ignition wire (**5**, Fig. 8.3) and the ground connection (**6**, Fig. 8.3).
- Plug on the cables (**3**, Fig. 8.3) at the fan motor and the cable (**4**, Fig. 8.3) at the gas valve.
- Connect the gas supply with a new seal to the gas valve. Use the spanner flat at the flexible gas line to hold up the gas valves.

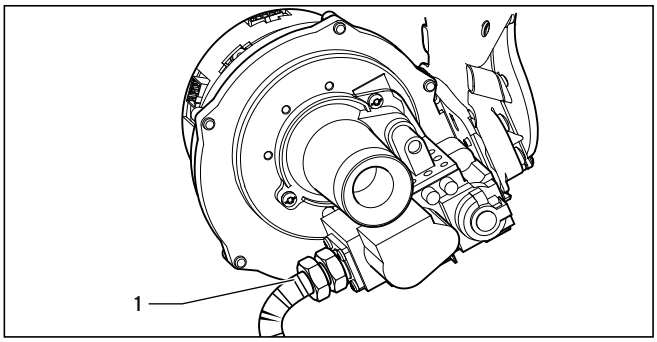

Fig. 8.6 Checking for gas tightness

Caution!
Open the gas feed and check the gas tightness of the boiler with leak detector spray. Check the screwed connection (1) particularly carefully.

- Make sure the blue sealing ring in the air intake pipe is positioned correctly in the seal face.
- Insert the air intake pipe onto the intake stubs and fasten the pipe with the retaining screw (**2**, Fig. 8.2).

8.4 Cleaning the condensate siphon

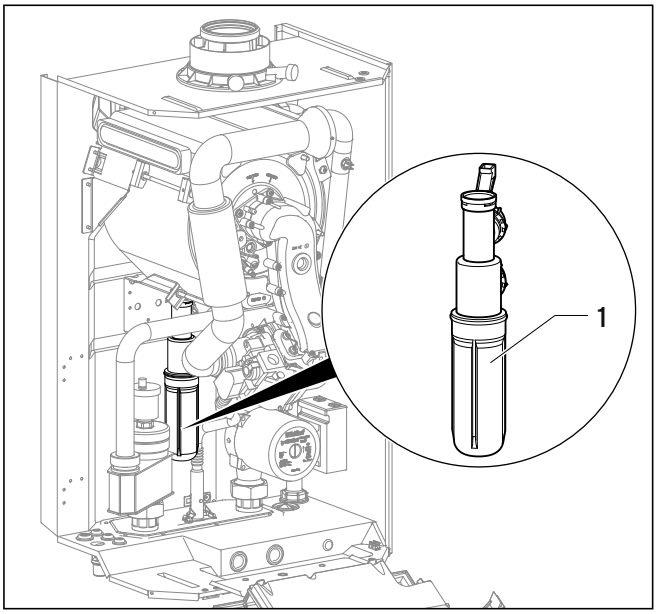

Fig. 8.7 Cleaning the condensate siphon

Danger!
If the boiler is operated with empty condensate siphon, there is risk of poisoning from escaping flue gases.
Therefore, fill up the siphon again after each cleaning session.

- Unscrew the lower section (**1**) of the condensate siphon.
- Clean the bottom of the siphon by flushing it out with water.
- Fill the lower section of the siphon about 3/4 with water.
- Screw the lower section back to the condensate siphon.

8.5 Cleaning the condensate ducts

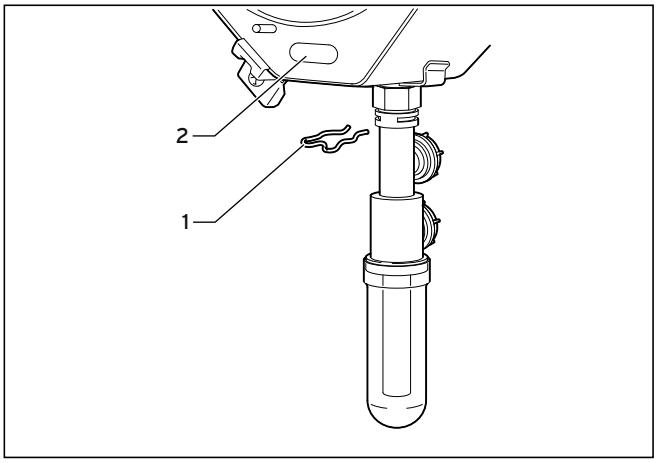

Fig. 8.8 Dismounting the condensate siphon

- Completely remove the condensate siphon to clean the condensate ducts by pulling out the clamp (**1**). This allows access to the condensate discharge nozzle on the heat exchanger.
- You can remove accumulations of dirt in the front of the condensate discharge area via the lower cleaning eye (**2**) on the heat exchanger.
- Refill the siphon with water.

8.6 Cleaning the air separation system

Danger!
Danger of burning or scalding!
All water-carrying components present a danger of injury and scalding. Only carry out work on these components if they have cooled down.

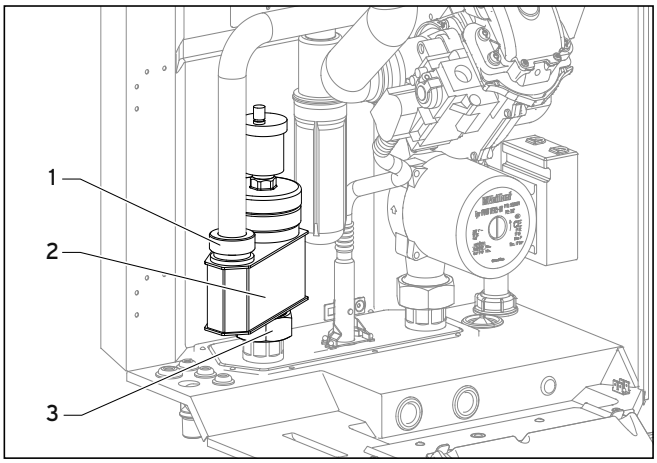

Fig. 8.9 Cleaning the air separation system

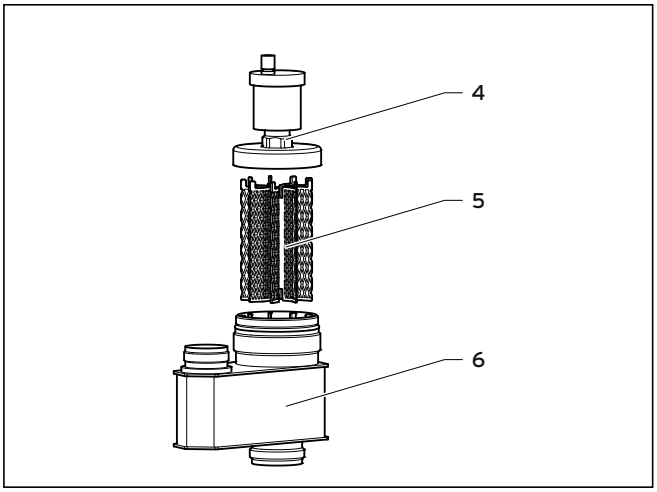

Fig. 8.10 Cleaning the filter

8.6.1 Cleaning the filter

You can clean or replace the filter (**5**) in the air separator (**2**) without having to remove the air separator.

- Unscrew the brass cover (**4**) of the steel casing (**6**).
- Pull the filter (**5**) upwards out of the air separator.

You can either clean the filter with hot water or replace it with a new one.

- Insert the filter into the air separator.
- Screw the brass cover onto the air separator.

8.6.2 Cleaning the air separator

If the collector tray (on the inside of the casing next to the filter) is heavily soiled, you can completely dismount the air separator (**2**), clean it with hot water then reinsert it.

- At first unfasten the 1.5" nut (**3**) on the lower outlet.
- Turn the casing on the axis of the upper connection.
- Only now unfasten the knurled nut (**1**) for the upper inlet.
- Slide down the casing and pull the complete air separator forwards out of the boiler.
- Dismount the filter as described in 8.6.1.

Now you can clean the air separator and filter with hot water.

Caution!
All O-rings must be replaced with new ones as otherwise leaks may occur!

- To reinstall the air separator, carry out the steps described above in reverse.

8.7 Checking the charge pressure of the external expansion vessel

- Measure the charge pressure of the expansion vessel at the testing nozzle of the vessel when the boiler is depressurised.

- Fill the expansion vessel with air at a pressure of less than 0.75 bar according to the static head of the heating installation.
- If water is discharged at the testing nozzle of the expansion vessel the vessel must be replaced.

8.8 Checking gas connection pressure (gas inlet working pressure)

To check the connection pressure proceed as described in Chapter 6.3.3.

8.9 Checking the CO_2 concentration

To check the CO_2 concentration follow the procedure described in Chapter 8.1.3.

8.10 Test operation

Always perform the following checks after completing any maintenance task:

- Start up the appliance in accordance with the instructions in the relevant operating manual.

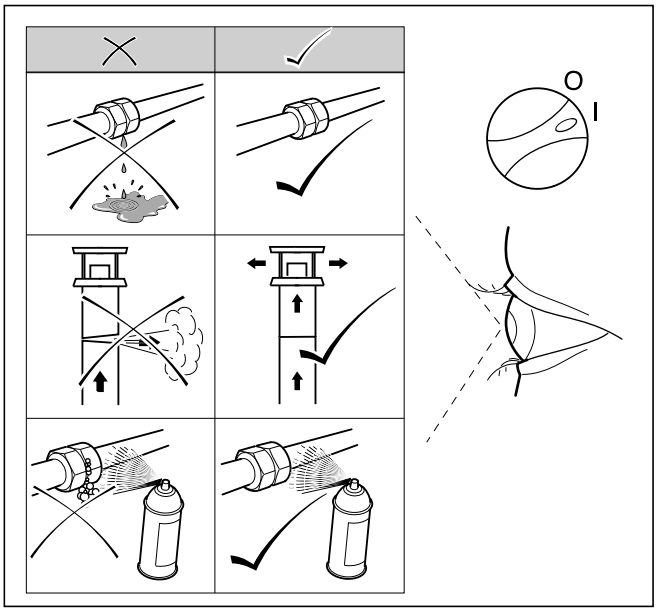

Fig. 8.11 Tightness check

- Check the appliance for gas and water leaks.
- Check the flue system for leaks and for proper fixation.
- Check over-ignition and that the flame on the burner is burning evenly.
- Check the function of the heating (see Chapter 6.4.1) and hot water generation (see Chapter 6.4.2).
- Document the inspection/maintenance tasks carried out in the form provided in the inspection or maintenance contract.

9 Troubleshooting

Note!
Whenever possible, please quote the fault message displayed (F.xx) and the status of the boiler (S.xx) when contacting the Vaillant customer service or your Vaillant service partner.

If the display flashes „SEr“ this means, that you should carry out a service in the near future. The boiler is not in a failure mode but works further on. Press the info-button „i“ for addional information.

9.1 Diagnostics

9.1.1 Status codes

The status codes that you can see on the display provides information about the current operating condition of the boiler.

The display of the status codes can be viewed as follows:

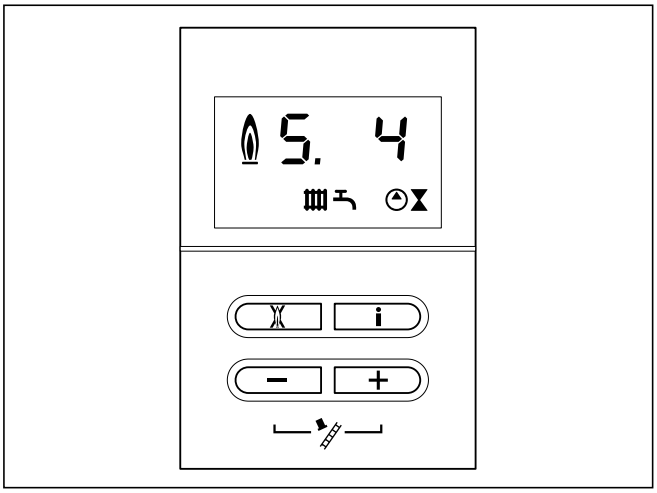

Fig. 9.1 Display of status codes

- Push the "i" button.
  The status code appears in the display, e.g. S.4 for "Heating mode, burner on.".

The display of the status codes can be ended as follows:

- Push the "i" button
  or
- Do not push any buttons for about 4 minutes.
  Depending on the settings, the current flow temperature or current water pressure of the heating installation reappears in the display.

Display	Meaning
Heating mode	
S.0	Heating no heat demand
S.1	Heating mode fan start-up
S.2	Heating mode pump pre-run
S.3	Heating mode ignition
S.4	Heating mode burner on
S.5	Heating mode pump/fan overrun
S.6	Heating mode fan overrun
S.7	Heating mode pump overrun
S.8	Heating remaining off-period xx min
Domestic hot water mode (DHW)	
S.20	DHW demand
S.21	DHW mode fan start-up
S.22	DHW mode pump pre-run
S.23	DHW mode ignition
S.24	DHW mode burner on
S.25	DHW mode pump/fan overrun
S.26	DHW mode fan overrun
S.27	DHW mode pump overrun
S.28	DHW mode burner off-period
Other:	
S.30	Heating mode blocked by room thermostat (terminal 3-4 open)
S.31	Summer mode active or no heat demand from eBUS controller
S.32	Heat exchanger antifreeze active, as fan speed variation is too high. Boiler is within the waiting time of the operation block function
S.34	Antifrost mode active
S.36	Reference setting of continuous controller 7-8-9 or e-BUS controller is < 20°C and blocks the heating mode
S.39	Contact thermostat activated
S.41	Water pressure > 2.8 bar
S.42	Exhaust flap return signal blocks burner operation (only in connection with accessories) or condensate pump faulty, heat demand is blocked
S.53	Boiler remains within the waiting time for the modulation block/operation block function due to a water lack (flow-return difference too large)
S.54	Boiler remains within the waiting time of the operation block function due to a water lack (temperature gradient)
S.59	Waiting time: minimum quantity of circulation water not achieved
S.85	Service info: Check quantity of circulation water
S.96	Return temperature sensor test running, heating demands are blocked
S.97	Water pressure sensor test running, heating demands are blocked
S.98	Flow/return temperature sensor test is in progress, heating demands are blocked
SEr	Carry out a service in the near future. Press the „i"-button for further information.

Table 9.1 Status codes

9.1.2 Diagnosis codes

In the diagnosis mode, you can change certain parameters or display more information.
The diagnosis information is divided into two diagnosis levels. The 2nd diagnosis level can be reached only after entering a password.

Caution!
The access to the 2nd diagnosis level may only be used by a qualified heating engineer.

1st diagnosis level

- Push the "i" and "+" buttons simultaneously.

The display shows "d.0".

- Scroll to the desired diagnosis code on the 1st diagnosis level with the "+" or "–" buttons (see Table 9.2).
- Push the "i" button

The display shows the associated diagnosis information.

- If necessary, use the "+" or "–" keys to change the value (display flashes).
- Save the new value by holding the "**i**" button pressed for about 5 seconds until the display stops flashing.

You can finish the diagnosis mode as follows:

- Push the "i" and "+" buttons simultaneously or
- Do not push any buttons for about 4 minutes.

The current heating flow temperature or the current water pressure of the heating installation reappears in the display.

Display	Meaning	Display value/adjustable value
d.0	Heating part load	Adjustable heating part load in kW (factory setting: approx. 70% of maximum output)
d.1	Pump overrun for heating mode	2 - 60 minutes (factory setting: 5)
d.2	Maximum burner anti-cycling time heating at 20°C flow temperature	2 - 60 minutes (factory setting: 20)
d.4	Measured value of cylinder sensor	in °C
d.5	Set value of flow temperature (or target value of return)	in °C, maximum of the value set in d.71, limited by an eBUS controller if connected)
d.7	Set value cylinder temperature	40 to 65 °C (maximum temperature can be adjusted at d.20)
d.8	Room thermostat at terminals 3-4	0 = Room thermostat open (no heat request) 1 = Room thermostat closed (heat request)
d.9	Set value flow temperature at terminal 7-8-9	in °C, minimum off, target value of ext. eBus and target value of terminal 7
d.10	Status internal pump	1 = on, 0 = off
d.11	Status external heating pump	1 to 100 = on, 0 = off
d.12	Status cylinder charge pump	1 to 100 = on, 0 = off
d.13	Status circulation pump	1 to 100 = on, 0 = off
d.15	Pump speed actual value	Actual value internal pump in %
d.22	Hot water demand via C1/C2, internal hot water control system	1 = on, 0 = off
d.23	Summer/winter operating mode (heating on/off)	1 = heating on, 0 = heating off (summer mode)
d.24	not relevant	not relevant
d.25	Hot water generation enabled by eBUS controller	1 = yes, 0 = no
d.29	Actual value circulation water quantity of flow rate sensor	Actual value in m^3/h
d.30	Control signal for the gas valve	1 = on, 0 = off
d.33	Fan speed target value	in rpm/10
d.34	Fan speed actual value	in rpm/10
d.35	not relevant	Not relevant
d.40	Flow temperature	actual value in °C
d.41	Return temperature	actual value in °C
d.44	Digitalised ionisation voltage	Display range 0 to 102, >80 no flame, <40 good flame display
d.47	Outside temperature (with weather-controlled Vaillant controller)	Actual value in °C
d.76	Boiler variant (display): Device specific number (DSN)	46
d.90	Status digital regulator	1 = detected, 0 = not detected (eBUS Address <=10)
d.91	Status DCF with external sensor connected	0 = no reception, 1 = reception, 2 = synchronised, 3 = valid
d.97	Activation of the 2nd diagnosis level	Code: 17 for level 2
d.98	Telephone number of heating engineer	Programmable telephone number

Table 9.2 Diagnosis codes in the 1st diagnosis level

2nd diagnosis level

- Scroll as described above in the 1st diagnosis level to diagnosis code d.97
- Change the displayed value to **17** (password) and save this value.

You are now in the 2nd diagnosis level in which all information from the 1st (see Table 9.2) and the 2nd (see Table 9.3) is displayed.
Scroll and change values and exit diagnosis mode as described in the 1st diagnosis level.

☞ **Note!**
If you push the buttons "i" and "+" within 4 minutes of leaving the 2nd diagnosis level, you can directly access the 2nd diagnosis level without re-entering the password.

Display	Meaning	Display value/adjustable value
d.14	Pump speed target value	Target value of internal pump in % Possible settings: 0 = auto (factory setting) 1 = 53% 2 = 60% 3 = 70% 4 = 85% 5 = 100%
d.17	Heating flow/return regulation changeover	0 = flow, 1 = return (factory setting: 0)
d.18	Specifying the pump operating mode	0 = overrun 1 = continuous 2 = intermittent (factory setting)
d.20	Maximum setting for cylinder target value	40 to 70°C (factory setting: 65°C)
d.26	Additional relay control ecoTEC	1 = circulator 2 = ext. pump (factory setting) 3 = cylinder charge pump 4 = extractor hood 5 = ext. solenoid valve 6 = ext. fault message 7 = not active 8 = remote control eBUS (not yet supported) 9 = legionella pump (not active)
d.27	Switch of relay 1 on the multifunctional module 2 in 7	1 = circulator (factory setting) 2 = ext. pump 3 = cylinder charge pump 4 = extractor hood 5 = ext. solenoid valve 6 = ext. fault message 7 = not active 8 = remote control eBUS (not yet supported) 9 = legionella pump (not active)
d.28	Switch of relay 2 on the multifunctional module 2 in 7	1 = circulator 2 = ext. pump (factory setting) 3 = cylinder charge pump 4 = extractor hood 5 = ext. solenoid valve 6 = ext. fault message 7 = not active 8 = remote control eBUS (not yet supported) 9 = legionella pump (not active)
d.50	Offset for minimum speed	in rpm/10, setting range: 0 to 300 (factory setting 30)
d.51	Offset for maximum speed	in rpm/10, setting range: -99 to 0 (factory setting -45)
d.60	Number of safety thermostat shutdowns	Number
d.61	Number of faults of the automatic combustion system	Number of unsuccessful ignitions in the last attempt
d.64	Average ignition time	in seconds
d.65	Maximum ignition time	in seconds
d.67	Remaining burner anti-cycling time	in minutes
d.68	Unsuccessful ignitions at 1st attempt	Number
d.69	Unsuccessful ignitions at 2nd attempt	Number
d.70	not relevant	Not relevant
d.71	Target value maximum flow temperature	Setting range in °C: 40 to 85 (factory setting: 75)
d.72	Pump overrun time after cylinder charging	Setting range in seconds: 0, 10, 20 to 600 (factory setting: 80 s)
d.75	Maximum charging time for cylinder without an own control system	Setting range in min: 20 - 90 (factory setting: 45 min)
d.77	Limitation of cylinder charging output in kW	Setting range in kW: depending on boiler (factory setting: maximum output)
d.78	Limitation of cylinder charging temperature in °C	Setting range in °C: 55 to 85 (factory setting: 80) **Note:** Chosen value must be at least 15 K or 15 °C above set cylinder target value.
d.80	Operating hours heating	in h[1)]

Table 9.3 Diagnosis codes for diagnosis level 2 (continued on next page)

Display	Meaning	Display value/adjustable value
d.81	Operating hours hot water generation	in h[1)]
d.82	Burner start-ups in heating mode	Number/100[1)] (3 equals 300)
d.83	Burner start-ups in hot water mode	Number/100[1)] (3 equals 300)
d.84	Maintenance indicator: Number of hours until the next maintenance	Setting range: 0 to 3000 h and "-" for deactivated Factory setting: "-" (300 corresponds to 3000 h)
d.93	DSN appliance variant setting	Setting range: 0 to 99
d.96	Factory setting	1 = Resetting adjustable parameters to factory setting

1) In the diagnosis codes 80 to 83 5 digit figure values are stored. When selecting e.g. d.80 only the first two digits of the figure value are displayed (e.g.10). By pressing the "i" key, the display switches over to the last three figures (e.g. 947). The operating hours counter of the heating in this case would be 10947 h. Pressing the "i" again causes the display to switch back to the diagnosis point that was called up.

Table 9.3 Diagnosis codes at diagnosis level 2 (continued)

9.1.3 Fault messages

The fault messages displace all other displays when failures occur. Occuring failures are displayed as "F ...", e.g. "F.10" (see Tab. 9.4).
If several failures occur simultaneously, each fault message is displayed for approximately two seconds on an alternating basis.
Once you have repaired the failure push the fault clearance key to restart the boiler.
If the failure cannot be repaired and reoccurs despite having carried out several fault clearance attempts, please contact your factory customer service.

9.1.4 Fault memory

The last ten failures which occurred are saved in the fault memory of the boiler.
- Push the "i" and „-" buttons simultaneously.
- Scroll back in the failure memory with the "+" button.

You can exit the fault memory display as follows:
- Push the "i" button
  or
- Do not push any buttons for about 4 minutes.

Depending on the settings, the current flow temperature or current filling pressure of the heating installation reappears in the display.

Code	Meaning	Cause
F. 0	Break Flow NTC	NTC plug not plugged in or has come loose, multiple plug on the PCB not plugged in correctly, interruption in cable harness, NTC defective
F. 1	Break Return NTC	NTC plug not plugged in or has come loose, multiple plug on the PCB not plugged in correctly, interruption in cable harness, NTC defective
F.10	Short circuit Flow NTC	Short to ground/short circuit in cable harness, NTC defective
F.11	Short circuit Return NTC	Short to ground/short circuit in cable harness, NTC defective
F.13	Short circuit Cylinder sensor	Short to ground/short circuit in cable harness, moisture in plug, NTC defective
F.20	Safety shutdown Temperature limiter	Incorrect earth connection between cable harness and boiler, flow or return NTC defective (loose connection), black discharge via ignition cable, ignition plug or ignition electrode
F.22	Safety shutdown Water lack/dry combustion	No or insufficient water in the boiler, cable for pump, water pressure sensor or flow rate sensor loose/not plugged in/defective, pump blocked or defective, pump output too low, non-return valves blocked/incorrectly installed, minimum quantity of circulation water not reached
F.23	Safety shutdown Over temperature-spread NTC	Pump blocked, insufficient pump output, air in boiler, system pressure too low, flow and return NTC interchanged
F.24	Safety shutdown Temperature rises too quickly	Pump blocked, insufficient pump output, air in boiler, system pressure too low, non-return valves blocked/incorrectly installed, flow and return NTC interchanged
F.25	Safety shutdown Excessive flue temperature	Break in plug connection for optional flue gas safety thermostat, break in cable harness
F.27	Safety shutdow Flame simulation	Moisture on the PCB, PCB (flame monitor) defective, gas solenoid valve leaking
F.28	Failure during start-up: Ignition failed	Gas meter defective, gas pressure monitor has been triggered, air in gas, gas inlet working pressure too low, Thermal isolator device (TAE) has been triggered, condensate duct blocked, failure at gas valve, multiple plug on PCB incorrectly plugged in, break in cable harness, ignition system (ignition transformer, ignition cable, ignition plug, ignition electrode) defective, ionisation current interrupted (cable, electrode), incorrect earthing of boiler, PCB defective
F.29	Failure during operation: Re-ignition failed	Gas feed interrupted from time to time, flue gas recirculation, condensate duct blocked, faulty earthing of boiler
F.32	Failure Fan	Plug at fan not correctly plugged in, multiple plug on PCB not correctly plugged in, break in cable harness, fan blocked, Hall sensor defective, PCB defective
F.49	Failure eBUS	Short-circuit on eBUS, eBUS overload or two power supplies with different polarities on the eBUS
F.61	Failure Activation fuel valve	short circuit/short to ground in cable harness for gas valve, gas valve defective (coils shorted to ground), PCB defective
F.62	Failure Off delay fuel valve	delayed shutdown of gas valve, delayed extinguishing of flame signal, gas valve leaking, PCB defective
F.63	Failure EEPROM	PCB defective
F.64	Failure Electronics/sensor	Flow or return NTC short circuited, PCB defective, recirculation
F.65	Failure Electronics temperature	PCB too hot due to external effect, PCB defective
F.67	Failure Electronics/flame	Implausible flame signal, PCB defective
F.70	Invalid application ID	Spare part case: Display and PCB changed at the same time and boiler variant not re-set
F.71	Failure Flow NTC	Flow sensor signalling constant value -> flow sensor defective
F.72	Failure Flow/return NTC	Temperature spread between flow sensor and return sensor too large -> flow and/or return sensor defective
F.73	Failure Water pressure sensor	Interruption/short-circuit of water pressure sensor, interruption/ short-circuit to GND in supply line to water pressure sensor

Table 9.4 Fault messages (continued on next page)

Code	Meaning	Cause
F.74	Failure Water pressure sensor signal outside correct range (too high)	Line to water pressure sensor has short-circuited at 5V/24V or internal failure in water pressure sensor
F.75	Failure Pump/water lack	Water pressure sensor and/or pump defective, air in heating installation, too little water in boiler; check adjustable bypass, connect external expansion vessel to return
F.77	Failure Flue gas damper/condensate pump	condensate pump defective, cable connection; no checkback signal from flue gas damper (bridge) of "2 in 7" multifunctional module, flue gas damper has triggered
con	No communication with the electronics	Communication failure between display and PCB in the electronic box

Table 9.4 Fault messages (continued)

9.2 Check programs

Special functions can be triggered in the boilers by activating various check programs.
These programs are given in detail in Table 9.5.
The check programs P.0 to P.6 are started as follows:

- Push the "+" button and hold it down.
- Push the "Fault clearance key" once or switch the main switch off and on again.

After approximately 5 seconds, P.0 appears in the display. You can now release the "+" button.

- Push the "+" key to start counting the check programme number upwards.
- Push the "i" to operate the boiler now and to start the check programme.
- Push "i" and "+" simultaneously to exit the check programs. You can also exit the check programs by not pushing any button for 15 minutes.

Display	Meaning
P. 0 [1]	Check Program Dearation The heating circuit and the hot water circuit are bled via the automatic air vent (the cap of the automatic air vent must be released). 1 x "i" button: Start bleeding heating circuit (display view: HP) 2 x "i" button: Start bleeding charging circuit (display view: SP) 3 x "i" button: Exit bleeding program The heating pump is cyclically actuated. **Note:** The check program deaeration takes about 6.5 minutes to complete.
P.1	Check Program Max. Load: The boiler is operated at full load after successful ignition.
P.2	Check Program Min. Load: The boiler is operated at minimum load after successful ignition.
P.5	Check Program Safety Overheat Cut-Off: The burner is switched on at maximum output and the temperature control is switched off so that the boiler produces heat, bypassing a regular shutdown, until the shutdown temperature of the safety thermostat is reached (97 °C).
P.6	Check Program Diverter Valve Middle Position: (not active)

Table 9.5 Check programs

[1] Bleeding the boiler circuit:
Actuation of heating pump for 15 cycles: 15 s on, 10 s off.
Display view: HP or SP.

9.3 Resetting parameters to factory settings

In addition to the option of manually resetting the factory settings for the individual parameters specified in Tables 9.2 and 9.3, you can also reset all parameters simultaneously.

- Change the value at diagnosis point "d.96" in diagnosis level 2 to 1 (see Chapter 9.1.2).

The parameters of all adjustable diagnosis points now correspond to the factory settings.

10 Replacing components

The tasks listed below in this section may be carried out only by a qualified heating engineer.
The original components of the product were also certified as part of the CE declaration of conformity. If you do not use certified Vaillant original spare parts for maintenance or repair work, this voids the CE conformity of the product. We therefore strongly recommend that you fit Vaillant genuine spare parts. You can find information about the available Vaillant original spare parts on the back page of these instructions, below the contact address.

➤ If you require spare parts for maintenance or repair work, use only Vaillant genuine spare parts.

- Make sure the parts are correctly fitted and that their original position and alignment are retained.

10.1 Safety instructions

Danger!
Each time components are replaced, comply with the safety instructions below for your own safety and to avoid damage to the boiler.

- Take the boiler out of operation.

Danger!
Risk of fatal electric shock through contact with live connections!
Disconnect the boiler from the power mains by de-energising the boiler using an isolating device with a contact opening of at least 3 mm (e.g. fuses or power switches).

- Close the gas isolation valve and the service valves in the heating flow and return.
- Close the service valve in the cold water supply pipe.
- Empty the boiler if you want to replace water-bearing components of the boiler!
- Make sure that water does not drip on live components (e.g. the electronic box)!
- Use only new seals and O-rings!
- After completing the work, perform a tightness check and function check (see Chapter 6.4)

10.2 Replacing the burner

Danger!
Before replacing the component, observe the safety information in Chapter 10.1.

- Dismount the compact thermal module as described in Chapter 8.3.1.

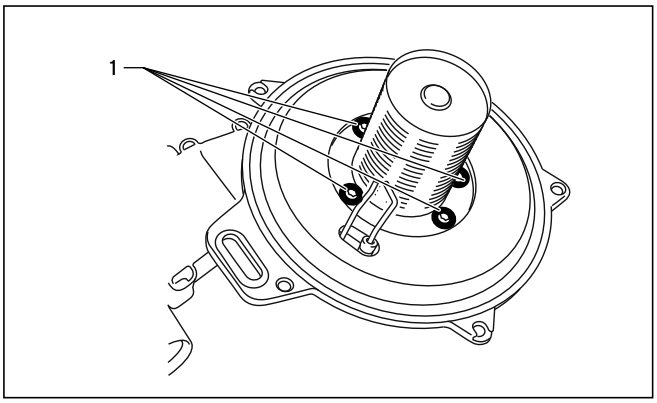

Fig. 10.1 Replacing the burner

- Release the four screws (**1**) on the burner, and remove the burner.
- Mount the new burner with a new seal. Make sure the seal notch for the inspection glass fits into the notch of the burner flange.
- Re-install the compact thermal module as described in Chapter 8.3.4.
- After completing the work, perform a gas-tightness check and function check (see Chapter 8.10).

10.3 Replacing the fan or the gas valve

Danger!
Before replacing the component, observe the safety information in Chapter 10.1.

- Disconnect the boiler from the power mains as described in Chapter 10.1, and close the gas isolation valve.
- Remove the air intake pipe (**1**, Fig. 8.2).
- Disconnect the gas supply pipe at the gas valve (**6**, Fig. 10.3).

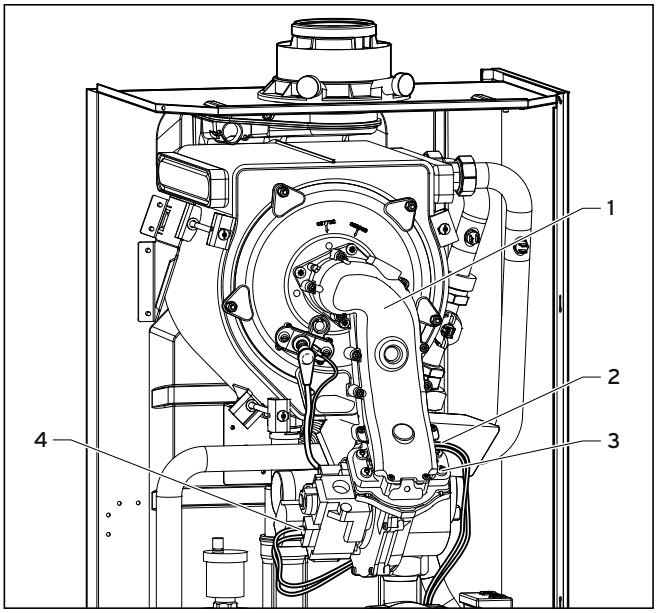

Fig. 10.2 Dismantling the fan with gas valve

- Pull the plug (**4**) out of the gas valve.
- Pull the plugs (**2**) out of the fan.
- Unfasten the four screws (**3**) on the compact thermal module (**1**).
- Remove the complete unit "gas valve/fan".

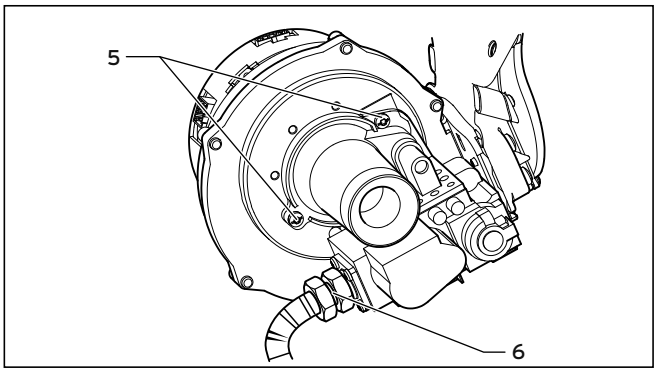

Fig. 10.3 Screwed connection gas valve/fan

- Release both fixing screws (**5**) on the gas valve and remove the fan from the gas valve.
- Replace the defective component.

Caution!
The gas valve and fan must be returned to their previous installation position. Use a new seal!

- Screw the fan to the gas valve. Use new seals.
- Re-install the complete "gas valve/fan" boiler in the reverse sequence.
- After completing the work, perform a gas-tightness check and function check (see Chapter 8.10)

10.4 Replacing the heat exchanger

Danger!
Before replacing the component, observe the safety information in Chapter 10.1.

- Disconnect the boiler from the power mains as described in Chapter 10.1, and close the gas isolation valve.
- Close the service valves in the heating flow and return and drain the boiler.
- Dismount the compact thermal module as described under 8.3.1.

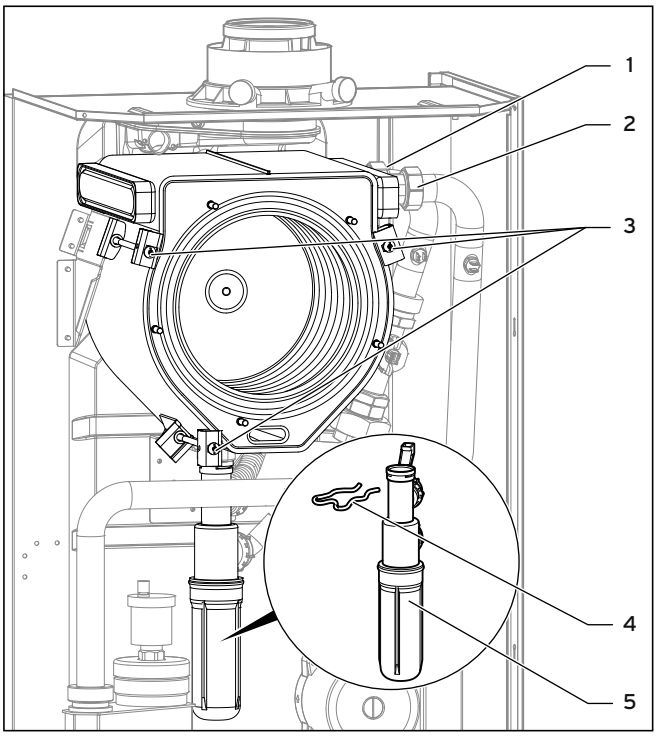

Fig. 10.4 Replacing the heat exchanger

- Pull out the clip (**4**) of the condensate siphon (**5**).
- Unfasten the screw connections on the condensate siphon and pull it off the heat exchanger.
- Disconnect the flow connection (**2**) and the return connection (**1**) on the heat exchanger.
- Slacken the white plastic nut between the siphon and heat exchanger.
- Unfasten the three screws (**3**) on the heat exchanger and take it out of the boiler.
- Unfasten both brass connection pieces (positions **1** and **2**) on the old heat exchanger and screw these onto the new one. Use new seals in the process!
- Mount the new heat exchanger in reverse order and replace the seals.
- Fill and bleed the boiler, also, if necessary, the system after installing the new heat exchanger.
- After completing the work, check for gas and water leaks and perform a function check (see Chapter 6.4).

10.5 Replacing PCB and display

Danger!
Before replacing the component, observe the safety information in Chapter 10.1.

Danger!
Risk of fatal electric shock through contact with live connections!
Disconnect the boiler from the power mains by pulling out the mains plug or deenergising the boiler using an isolating device with a contact opening of at least 3 mm (e.g. fuses or power switches). Only after this you may carry out the installation.

- Comply with the assembly and installation manuals provided with the spare parts.

Replacing the display or PCB
If you are replacing only one of the two components, the parameter matching functions automatically. By switching on the boiler, the new component takes over the previously set parameters from the unreplaced component.

Simultaneously replacing display and PCB
If both components are replaced at the same time (in event of spare part installation) the boiler enters failure mode when it is started up and displays the fault message "F.70".

Caution!
Risk of damage!
If you replace both components at the same time, it is essential to check whether the correct spare part display for this boiler variant is available. You must not use any other spare part displays!

- Enter the number of the boiler variant under diagnosis point "d.93" at the second diagnosis level in accordance with Table 10.1 (see Chapter 9.1.2).

The PCB is now set to the boiler type and the parameters of all adjustable diagnosis points correspond to the factory settings. You can now make the specific settings for the system.

Boiler	Number of boiler variant (DSN)
ecoTEC VU GB 466/4-5 H	46

Table 10.1 Boiler variant numbers

11 Vaillant Service

To ensure efficient and reliable operation of your boiler it is recommended that regular servicing is carried out by your service provider.

Vaillant Applied System Sales

Vaillant Ltd.
Nottingham Road
Belper
Derbyshire DE56 1JT
United Kingdom

VaillantTraining: 08 45 601 88 85
E-mail: training@vaillant.co.uk

Vaillant After Sales Service: 08 70 850 30 72 (Mon-Fri 8:30 – 17:30)
Technical Help: 08 44 693 31 33 (Mon-Fri 8:30 – 17:30)
Fax: 017 73 52 59 46
E-mail: aftersales@vaillant.co.uk

12 Recycling and disposal

Both the gas fired boiler and its transport packaging consist mainly of recyclable raw materials.

12.1 Boiler
The boiler and the accessories do not belong to domestic waste. Make sure the old boiler and any existing accessories are disposed of properly.

12.2 Packaging
The transport packaging is disposed by the recognised skilled trade company that installed the boiler.

Note!
Please observe the applicable national legal regulations.

13 Technical data

ecoTEC	VU GB 466/4-5 H	unit
Heat Output Range (heating 50/30 °C)	12,9 - 46,4	kW
Heat Output Range (heating 80/60 °C)	12,3 - 44,1	kW
Maximum Heat Input (Net)	45	kW
Net Efficiency at 100% load	98,4	%
Net Efficiency at 30% load	108,3	%
SEDBUK rating	A	
SAP seasonal Efficiency	90,5	%
Gas inlet working pressure required (natural gas)	20	mbar
Gas inlet working pressure required (LPG)	37	mbar
NOx class	5	-
NOx level	42	mg/kWh
CO_2 Percentage (after 5 minutes full load +/- 1)	8,8	%
Recommended CO level	150	ppm
Gas flow rate (natural gas)	4,8	m^3/h
Gas flow rate (LPG)	3,5	kg/h
Rated water volume (when ΔT = 20 K)	1935	l/h
Maximum flow temperature approximately	85	°C
Maximum operating pressure	3	bar
Condensate rate (pH value: 3.0-4.0)	4,5	l/h
Water content	4,5	l
Flue gas mass flow minimum/maximum	5.7 / 20.5	g/s
Flue gas temperature minimum/maximum	40 / 70	°C
Pressure drop across the heat exchanger (at full load and ΔT = 20 K)	350	mbar
Connections heating flow/return	1" internal 1.5" external	mm / "
Gas inlet	20	mm
Expansion relief valve	1/2 "	mm / "
Condensate drain	19	mm
Air/flue gas connection	80/125	mm
Mounting weight	46	kg
Height	800	mm
Width	480	mm
Depth	450	mm
Electrical connection	230 / 50	V/Hz
Electrical power consumption minimum/maximum (with integrated pump)	138 / 180	W
Type of protection	IP X 4 D	-
Certification number	CE-0085BR0308	

Table 13.1 Technical data ecoTEC

Benchmark Commissioning and Servicing Section

It is a requirement that the boiler is installed and commissioned to the manufacturers instructions and the data fields on the commissioning checklist completed in full.

To instigate the boiler guarantee the boiler needs to be registered with the manufacturer within one month of the installation.

To maintain the boiler guarantee it is essential that the boiler is serviced annually by a Gas Safe registered engineer who has been trained on the boiler installed. The service details should be recorded on the Benchmark Service Interval Record and left with the householder.

benchmark
COLLECTIVE MARK
THE MARK OF QUALITY FOR THE INSTALLATION, COMMISSIONING AND SERVICING OF DOMESTIC HEATING AND HOT WATER SYSTEMS

www.centralheating.co.uk

© Heating and Hotwater Industry Council (HHIC)

GAS BOILER SYSTEM COMMISSIONING CHECKLIST

This Commissioning Checklist is to be completed in full by the competent person who commissioned the boiler as a means of demonstrating compliance with the appropriate Building Regulations and then handed to the customer to keep for future reference.

Failure to install and commission according to the manufacturer's instructions and complete this Benchmark Commissioning Checklist will invalidate the warranty. This does not affect the customer's statutory rights.

Customer name:	Telephone number:
Address:	
Boiler make and model:	
Boiler serial number:	
Commissioned by (PRINT NAME):	Gas Safe register number:
Company name:	Telephone number:
Company address:	
	Commissioning date:
To be completed by the customer on receipt of a Building Regulations Compliance Certificate*	
Building Regulations Notification Number (if applicable):	

CONTROLS (tick the appropriate boxes)				
Time and temperature control to heating	Room thermostat and programmer/timer		Programmable room thermostat	
	Load/weather compensation		Optimum start control	
Time and temperature control to hot water	Cylinder thermostat and programmer/timer		Combination Boiler	
Heating zone valves	Fitted		Not required	
Hot water zone valves	Fitted		Not required	
Thermostatic radiator valves	Fitted		Not required	
Automatic bypass to system	Fitted		Not required	
Boiler interlock			Provided	

ALL SYSTEMS				
The system has been flushed and cleaned in accordance with BS7593 and boiler manufacturer's instructions			Yes	
What system cleaner was used?				
What inhibitor was used?		Quantity		litres
Has a primary water system filter been installed?	Yes		No	

CENTRAL HEATING MODE measure and record:			
Gas rate	m³/hr	**OR**	ft³/hr
Burner operating pressure (if applicable)	mbar	**OR** Gas inlet pressure	mbar
Central heating flow temperature			°C
Central heating return temperature			°C

COMBINATION BOILERS ONLY				
Is the installation in a hard water area (above 200ppm)?	Yes		No	
If yes, and if required by the manufacturer, has a water scale reducer been fitted?	Yes		No	
What type of scale reducer has been fitted?				
DOMESTIC HOT WATER MODE Measure and Record:				
Gas rate	m³/hr	**OR**	ft³/hr	
Burner operating pressure (at maximum rate)	mbar	**OR** Gas inlet pressure at maximum rate	mbar	
Cold water inlet temperature			°C	
Hot water has been checked at all outlets	Yes		Temperature	°C
Water flow rate			l/min	

CONDENSING BOILERS ONLY		
The condensate drain has been installed in accordance with the manufacturer's instructions and/or BS5546/BS6798	Yes	

ALL INSTALLATIONS							
Record the following:	At max. rate:	CO	ppm	**AND**	CO/CO_2	Ratio	
	At min. rate: (where possible)	CO	ppm	**AND**	CO/CO_2	Ratio	
The heating and hot water system complies with the appropriate Building Regulations						Yes	
The boiler and associated products have been installed and commissioned in accordance with the manufacturer's instructions						Yes	
The operation of the boiler and system controls have been demonstrated to and understood by the customer						Yes	
The manufacturer's literature, including Benchmark Checklist and Service Record, has been explained and left with the customer						Yes	

Commissioning Engineer's Signature
Customer's Signature
(To confirm satisfactory demonstration and receipt of manufacturer's literature)

*All installations in England and Wales must be notified to Local Authority Building Control (LABC) either directly or through a Competent Persons Scheme. A Building Regulations Compliance Certificate will then be issued to the customer.

benchmark COLLECTIVE MARK
THE MARK OF QUALITY FOR THE INSTALLATION, COMMISSIONING AND SERVICING OF DOMESTIC HEATING AND HOT WATER SYSTEMS

© Heating and Hotwater Industry Council (HHIC)

SERVICE RECORD

It is recommended that your heating system is serviced regularly and that the appropriate Service Interval Record is completed.

Service Provider

Before completing the appropriate Service Record below, please ensure you have carried out the service as described in the manufacturer's instructions. Always use the manufacturer's specified spare part when replacing controls.

SERVICE 01					Date:
Engineer name:					
Company name:					
Telephone No:					
Gas safe register No:					
Record:	At max. rate:	CO	ppm	**AND**	CO_2 %
	At min. rate: (Where Possible)	CO	ppm	**AND**	CO_2 %
Comments:					
Signature					

SERVICE 02					Date:
Engineer name:					
Company name:					
Telephone No:					
Gas safe register No:					
Record:	At max. rate:	CO	ppm	**AND**	CO_2 %
	At min. rate: (Where Possible)	CO	ppm	**AND**	CO_2 %
Comments:					
Signature					

SERVICE 03					Date:
Engineer name:					
Company name:					
Telephone No:					
Gas safe register No:					
Record:	At max. rate:	CO	ppm	**AND**	CO_2 %
	At min. rate: (Where Possible)	CO	ppm	**AND**	CO_2 %
Comments:					
Signature					

SERVICE 04					Date:
Engineer name:					
Company name:					
Telephone No:					
Gas safe register No:					
Record:	At max. rate:	CO	ppm	**AND**	CO_2 %
	At min. rate: (Where Possible)	CO	ppm	**AND**	CO_2 %
Comments:					
Signature					

SERVICE 05					Date:
Engineer name:					
Company name:					
Telephone No:					
Gas safe register No:					
Record:	At max. rate:	CO	ppm	**AND**	CO_2 %
	At min. rate: (Where Possible)	CO	ppm	**AND**	CO_2 %
Comments:					
Signature					

SERVICE 06					Date:
Engineer name:					
Company name:					
Telephone No:					
Gas safe register No:					
Record:	At max. rate:	CO	ppm	**AND**	CO_2 %
	At min. rate: (Where Possible)	CO	ppm	**AND**	CO_2 %
Comments:					
Signature					

SERVICE 07					Date:
Engineer name:					
Company name:					
Telephone No:					
Gas safe register No:					
Record:	At max. rate:	CO	ppm	**AND**	CO_2 %
	At min. rate: (Where Possible)	CO	ppm	**AND**	CO_2 %
Comments:					
Signature					

SERVICE 08					Date:
Engineer name:					
Company name:					
Telephone No:					
Gas safe register No:					
Record:	At max. rate:	CO	ppm	**AND**	CO_2 %
	At min. rate: (Where Possible)	CO	ppm	**AND**	CO_2 %
Comments:					
Signature					

SERVICE 09					Date:
Engineer name:					
Company name:					
Telephone No:					
Gas safe register No:					
Record:	At max. rate:	CO	ppm	**AND**	CO_2 %
	At min. rate: (Where Possible)	CO	ppm	**AND**	CO_2 %
Comments:					
Signature					

SERVICE 10					Date:
Engineer name:					
Company name:					
Telephone No:					
Gas safe register No:					
Record:	At max. rate:	CO	ppm	**AND**	CO_2 %
	At min. rate: (Where Possible)	CO	ppm	**AND**	CO_2 %
Comments:					
Signature					

*All installations in England and Wales must be notified to Local Authority Building Control (LABC) either directly or through a Competent Persons Scheme. A Building Regulations Compliance Certificate will then be issued to the customer.

benchmark COLLECTIVE MARK
THE MARK OF QUALITY FOR THE INSTALLATION, COMMISSIONING AND SERVICING OF DOMESTIC HEATING AND HOT WATER SYSTEMS

© Heating and Hotwater Industry Council (HHIC)

NOTE
THE AIR GAS RATIO VALVE IS FACTORY SET AND MUST NOT BE ADJUSTED DURING COMMISSIONING UNLESS THIS ACTION IS RECOMMENDED FOLLOWING CONTACT WITH THE MANUFACTURER.
If any such adjustment is recommended and further checking of the boiler is required the installer/service engineer must be competent to carry out this work and to use the flue gas analyser accordingly.
If the boiler requires conversion to operate with a different gas family (e.g. conversion from natural gas to LPG) separate guidance will be provided by the boiler manufacturer

PRIOR TO CO AND COMBUSTION RATIO CHECK
The boiler manufacturer's installation instructions should have been followed, gas type verified and gas supply pressure/rate checked as required prior to commissioning.
As part of the installation process, **especially where a flue has been fitted by persons other than the boiler installer**, visually check the integrity of the whole flue system to confirm that all components are correctly assembled, fixed and supported. Check that manufacturer's max. flue lengths have not been exceeded and all guidance has been followed (e.g. Gas Safe Technical Bulletin TB008).
The flue gas analyser should be of the correct type, as specified by BS 7967
Prior to its use, the flue gas analyser should have been maintained and calibrated as specified by the manufacturer. The installer must have the relevant competence for use of the analyser.
Check and zero the analyser IN FRESH AIR as per analyser manufacturer's instructions.

SET BOILER TO MAXIMUM RATE
In accordance with boiler instructions, set boiler to operate at max. rate (full load condition). Allow sufficient time for combustion to stabilise.
NOTE - Do not insert analyser probe during this period to avoid possible "flooding" of sensor.

CARRY OUT FLUE INTEGRITY CHECK USING ANALYSER
Insert analyser probe into air inlet test point and allow readings to stabilise.
NOTE - where no air inlet test point is provided then a flue integrity check with the analyser is not possible. The installer should verify that flue integrity has been visually checked in accordance with the yellow **"Prior to CO and combustion ratio check"** box above before proceeding to the **"Check CO and combustion ratio at maximum rate"** stage below.

Is $O_2 \geq 20.6\%$ and $CO_2 < 0.2\%$

NO →

VERIFY FLUE INTEGRITY
Analyser readings indicate that combustion products and inlet air must be mixing. Further investigation of the flue is therefore required.
Check that flue components are assembled, fixed and supported as per boiler/flue manufacturer's instructions.
Check that flue and flue terminal are not obstructed.

Is $O_2 \geq 20.6\%$ and $CO_2 < 0.2\%$

YES →

NO →

TURN OFF APPLIANCE AND CALL MANUFACTURER'S TECHNICAL HELPLINE FOR ADVICE.
THE APPLIANCE MUST NOT BE COMMISSIONED UNTIL PROBLEMS ARE IDENTIFIED AND RESOLVED.

YES ↓

CHECK CO AND COMBUSTION RATIO AT MAX. RATE
With boiler still set at maximum rate, insert analyser probe into flue gas sampling point. Allow readings to stabilise before recording.
NOTE - If no flue gas sampling point is present and the correct procedure is not specified in the manual, consult boiler manufacturer for guidance.

Is CO less than 350ppm and CO/CO_2 ratio less than 0.004

NO →

Check all seals around the appliance burner, internal flue seals, door and case seals. Rectify where necessary.

Is CO less than 335ppm and CO/CO_2 ratio less than 0.004

YES →

NO →

TURN OFF APPLIANCE AND CALL MANUFACTURER'S TECHNICAL HELPLINE FOR ADVICE.
THE APPLIANCE MUST NOT BE COMMISSIONED UNTIL PROBLEMS ARE IDENTIFIED AND RESOLVED. IF COMMISSIONING CANNOT BE FULLY COMPLETED, THE APPLIANCE MUST BE DISCONNECTED FROM THE GAS SUPPLY IN ACCORDANCE WITH THE GSIUR.
NOTE: Check and record CO and combustion ratio at both max. and min. rate before contacting the manufacturer.

YES ↓

SET BOILER TO MINIMUM RATE
In accordance with boiler instructions, set boiler to operate at minimum rate (to minimum load condition). Allow sufficient time for combustion to stabilise.
NOTE - If manufacturer's instructions do not specify how to set boiler to minimum rate contact Technical Helpline for advice.

CHECK CO AND COMBUSTION RATIO AT MINIMUM RATE
With boiler still set at minimum rate, insert analyser probe into flue gas sampling point. Allow readings to stabilise before recording.
NOTE - If no flue gas sampling point is present and the correct procedure is not specified in the manual, consult boiler manufacturer for guidance.

Is CO less than 350ppm and CO/CO_2 ratio less than 0.004

NO →

YES ↓

BOILER IS OPERATING SATISFACTORILY
no further actions required.
Ensure test points are capped, boiler case is correctly replaced and all other commissioning procedures are completed.
Complete Benchmark Checklist, recording CO and combustion ratio readings as required.

Supplier

Vaillant Ltd
Nottingham Road ▮ Belper ▮ Derbyshire ▮ DE56 1JT
Telephone 0845 602 2922 ▮ www.vaillant.co.uk ▮ info@vaillant.co.uk

Manufacturer

Vaillant GmbH
Berghauser Str. 40 ▮ D-42859 Remscheid ▮ Telefon 0 21 91/18-0
Telefax 0 21 91/18-28 10 ▮ www.vaillant.de ▮ info@vaillant.de

0020029172_04 GBIE 012014 - Subject to change